YSI *incorporated*

6200
Data Acquisition System
User's Manual

Table of Contents

Assistance

Help with this product can be obtained by contacting a YSI Factory Service Center.

United States
YSI Massachusetts
Repair Center
13 Atlantis Drive
Marion, MA 02738
Phone: 508 748-0366
Fax: 508 748-2543

Compliance

The 6200 Data Acquisition System meets the EN61326 Electronic Equipment for Measurement and Control specification when connected 6-series sonde cabling is protected from RF induction and industrial noise. The 6-series sondes may malfunction over the frequency range of 4.2 MHz to 8.5 MHz at a level of 3 volts RF on the cable (see Appendix E).

The 6-series sonde must be fitted with the CE bead kit for the 6200 system to meet the Class B emissions requirements.

The 6200 complies with EN61010 as manufactured.

Safety Notes

The following type of safety notes are used throughout this manual. Familiarize yourself with each of the notes and their meaning before using this product.

NOTE The NOTE is used to indicate a statement of company recommendation or policy. A NOTE is not associated directly with a hazard or hazardous situation, and it is not used in place of CAUTION or WARNING.

CAUTION! Used to indicate a hazard. It calls attention to a procedure that, if not correctly performed, could result in damage or injury. Do *not* proceed beyond a caution sign until the indicated conditions are fully understood and met.

WARNING! Used to indicate a hazard. It calls attention to a procedure that, if not correctly performed, could result in injury or loss of life. Do *not* proceed beyond a caution sign until the indicated conditions are fully understood and met.

General Safety Considerations

WARNING!
No operator serviceable parts inside. Refer servicing to a YSI factory service center.
To prevent electrical shock, do not remove covers.

This is the instruction documentation symbol. The product is marked with this symbol when it is necessary for the user to refer to instructions in this manual.

Section 1
Introduction

1.1 Description

The 6200 Data Acquisition System (6200 DAS) with EcoWatch DCP™ is an integrated hardware and software package specifically designed to be a powerful, yet easy to configure, multiparameter water quality and meteorological data collection platform with a graphical user interface. Information can be collected real-time or periodically from solid state memory. Combined with YSI 6-series sondes and/or a variety of meteorological sensors, this system is intended for use in research, assessment and regulatory compliance applications.

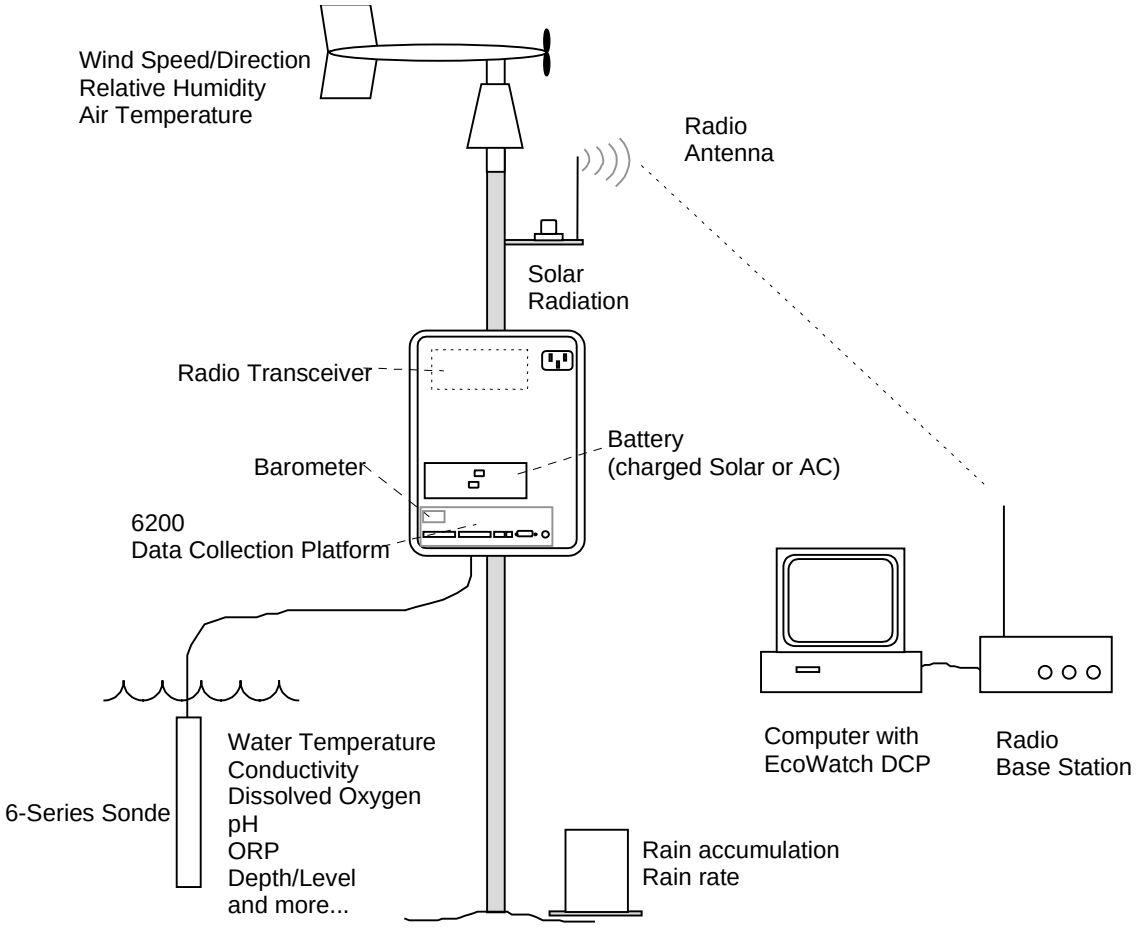

Figure 1.1 6200 DAS, Example Configuration

The system can be configured many ways, using a variety of sensors, communication modes and power options. The sensors provide signals for both water quality and meteorological measurement parameters. The meteorological sensors include wind speed and direction, relative humidity, barometric pressure, rainfall rate and accumulation, air temperature and solar radiation.

The water quality sensors include water temperature, conductivity, dissolved oxygen, pH, ORP, depth/level, turbidity, nitrate, ammonia and chloride.

The system includes a field station (6200 DCP), which houses a powerful data logger and connects to any of the water quality or meteorological sensors you choose. The data logger uses a 32-bit microprocessor with up to 1 megabyte of data storage memory. Windows®-based EcoWatch DCP software functions to interrogate the data logger and display real-time results in time stamped table format. Alternatively, you may request data stored in the field station less frequently to conserve power. The software also provides autoconfiguration capability during setup and calibration and includes a powerful plotting package for further analysis of the recorded data.

There are four options for communication between the field station and the base station computer. They are (1) direct link via RS-232 serial communication, (2) phone modem communication, (3) cellular phone communication, and (4) UHF radio communication.

There are three options for powering the field station. They are (1) rechargeable lead acid battery (12 volt, 12 Ah) mounted inside the NEMA 4X field station enclosure, (2) solar panel that charges the battery described in 1 above, and (3) 100/120//220/230-240 V~, 50/60 Hz power. The battery is installed in all versions. It is required in the solar setup and serves as a backup in the AC power setup.

The 6200 DAS comes to you configured to your order, including all interface cables. You may need to provide additional wiring and junction boxes if you are powering the field station with AC power. You may need to provide mounting supports for the main enclosure and various accessories, such as sensors, antennas and the like. Most of the mounting hardware you need comes with the 6200 system, but some may not be appropriate for your particular mounting configuration.

The 6200 DAS specifications are described below. You may refer to Appendix A for specifications of specific sensors and accessories. In addition, the accessory manuals provided with this manual package should be helpful.

1.2 General Specifications

Environmental

Operating Temperature	-40 to 60°C (-40 to 140 ^{o}F)
Enclosure	33 x 38 x 15.2 cm (13 x 15 x 6 in), fiberglass
Enclosure Rating	NEMA 4X
Pollution Degree	II (per UL3101)
Installation Category	III (per EN61010-1)

Data Acquisition

6200 DCP (standard)	64 KB RAM, 56 KB required for run-time memory 8 KB (logging memory)
Memory Options	256 KB, 200 KB (logging memory) 1 MB, 968 KB (logging memory)

User-Interface

Software	YSI EcoWatch DCP™ featuring autoconfigurable sensors, real-time data displays, powerful reporting and plotting options Compatibility: Windows® 3.1, 95, 98 and NT.
Computer Hardware	Minimum: PC 386 (4 MB RAM, 4 MB hard disk space) Recommended: PC 486DX or higher, (8 MB RAM, 4 MB hard disk space)

Power Information

Battery Type	Lead-acid, gel type, sealed (Power Sonic PS-12120 L)
Battery Rating	12 VDC, 5 A max current, 12 Ah capacity
Battery Fuse Type/Rating	Type 3AG (fast blow), 5 amps, 32 volts
I/O Interface Fuse Type/Rating	Type 3AG (slow blow), 5 amps, 32 volts

When applicable…

Line Power (nominal)	100/120//220/230-240 V~, 50/60 Hz, 0.8A//0.4A
Maximum Current	1.0 A @ 120 V~, 0.5 A @ 240 V~
AC Fuse Type/Rating for 100/120 V~ operation:	Type 3AG (slow blow), 1.0 A @ 120 V
AC Fuse Type/Rating for 220/240 V~ operation:	5 x 20mm IEC127 (time delay), 0.5 A(T), 250 V Fuses may be purchased from any YSI Factory Service Center.
Solar Panel	10 watt, 20 VDC (no load), 0.6 A max current
Electrical Safety	CE (pending)

Communication Options

Direct cable	3 m (10 ft) RS-232 cable
Radio	2 watt, 2-way (no license required), 467.8 MHz
Telephone modem	Hayes-compatible
Cellular modem	Wireless phone modem, uses PSTN through cellular network

Connectors/Access

Power (AC or solar)	1/2” non-metallic, water tight conduit or feed through gland AC, 3-prong male; Solar, 2-wire interface cable
Phone or direct	1/2” non-metallic, water tight conduit or feed through gland Phone, standard 3-wire cable; Direct RS-232, DB-9 male
RF (radio or cellular)	N-type
Sonde	MS-8 pin with tethered cap
Meteorological Suite	MS-17 pin with tethered cap
Rain Gauge	MS-4 pin with tethered cap
Solar Radiation Sensor	MS-5 pin with tethered cap
Ground	Standard Ground Lug

Sensor Compatibility

Sonde Compatibility	YSI 600, 600R, 600XL, 600XLM, 6820, 6920.
Met Suite (WS, WD, RH, AT)	YSI MAZ6213, w/ 4.6 m (15 ft) cable
Met Suite (WS, WD, RH, AT)	YSI MAZ6219, w/ 13.7 m (45 ft) cable
Pyranometer (solar radiation)	YSI MAZ6214, w/ 3 m (10 ft) cable, leveling base
Pyranometer (solar radiation)	YSI MAZ6212, w/ 3 m (10 ft) cable, leveling base, CE approved
Rain Gauge (tipping bucket)	ISCO 674, w/ 4.6 m (15 ft) cable
Rain Gauge, with heater	YSI MAZ6216, w/ 4.6 m (15 ft) cable (also requires AC power)
Barometer	YSI MAZ6217, (located inside NEMA enclosure)

1.3 How to Use this Manual

The 6200 DAS is a complex product that requires your understanding before you can successfully use it; therefore, we strongly suggest that you perform the following steps to get your system set up quickly and correctly in the field.

	Manual Sections to Read
Part I	
Familiarize yourself with the 6200 DAS	2, Browse through manual
Unpack and setup sonde	3, Sonde Manual
Check out Communication Method	2, 6, 7
Plan out and prepare remote site	4, 5, **See Appendix E for samples**
Part II	
Fully Calibrate Sonde	3, Sonde Manual
Prepare 6200 DCP for the field	7
Go to the field site and setup	4, 5, 6, 7
Verify that the system works	7, 8

Section 2 Getting Started
After this section you should be familiar with the 6200 DCP, the EcoWatch DCP user-interface software, and the sensors. This "in lab" setup should give you a basic understanding of the system. The more detailed information found in the other sections is necessary for the installation and day-to-day operation of the system.

Section 3 Setting Up a 6-Series Sonde
If you are using a 6-Series sonde with your system this section provides basic information related using a Sonde with this package.

Section 4 Powering the Field Station
Section 5 Connecting Sensors to the Field Station
Section 6 Communicating with the Field Station

Section 7 Collecting Data with EcoWatch DCP
This section <u>needs to be read</u> to properly configure the data collection platform. It includes power management strategies, and how to upload readings from the data collection platform.

Section 8 Reporting and Plotting Data with EcoWatch DCP
Section 9 Maintaining and Troubleshooting the System

Throughout this manual the phrase **6200 DAS** (Data Acquisition System) refers to the entire 6200 package you have purchased, including the field station, communications methods, and EcoWatch DCP software. The phrase **6200 DCP** (Data Collection Platform) and **field station** are used interchangeably and refer to the remote site setup. The phrase **base station** refers to the office/lab setup which includes your PC and communication method.

Section 2
Getting Started

2.1 Unpacking and Inspection

Inspect the outside of the shipping carton(s) for damage. If damage is detected, contact the carrier immediately. Remove the instrument from the shipping container. Be careful not to discard any parts or supplies. Confirm that all items on the packing list are present. Inspect all assemblies and components for damage. The basic 6200 DAS is shipped with the following major components. Some differences may occur based on the configuration you ordered.

- ❑ Data Collection Platform with barometer, communication and power accessories installed
- ❑ Battery for powering remote station (packed separately)
- ❑ Meteorological Suite (WS, WD, RH, AT) with 4.6 m cable, or 13.7 m cable
- ❑ Pyranometer (3 m cable) or Pyranometer with CE approval (3 m cable)
- ❑ Rain Gauge, ISCO 674 (4.6 m cable) or Rain Gauge with heating element (4.6 m cable)
- ❑ Sonde with appropriate sensors, cables, adapters and reagents
- ❑ Antennas (if applicable)
- ❑ Radio Base Station (if applicable)

If you ordered a sonde with reagents, the reagents may be shipped separately. See Appendix D for a complete list of accessories.

If any parts are damaged or missing, contact your factory representative immediately. If you do not know from which dealer your 6200 DAS was purchased, contact YSI/Massachusetts. See phone/fax information below in the footer.

Save the original packing cartons and packing materials. Carriers typically require proof of damage due to mishandling. Also, if it is necessary to return any parts, you should pack the equipment in the same manner it was received. Maintaining original cartons and packing material is less critical once the system is installed and working

If the 6200 DAS components match the packing list and the components appear to be in satisfactory condition, proceed to the sections below.

WARNING!
To avoid severe personal injury or damage to the equipment...installation, operation and service should be performed by qualified personnel who are thoroughly familiar with the entire contents of this manual.

The 6200 Data Acquisition System with EcoWatch DCP™ is an integrated hardware and software package. Most of the hardware will be installed in the field. We will refer to this as the "field" location. The "base" location will refer to the site where the radio base station or modem connects to the computer loaded with EcoWatch DCP. We strongly recommend that you assemble the system "in-house" and functionally test it prior to beginning the field

installation of the system. The next few pages of the manual describe the checkout installation. You need not use the final mounting hardware to perform this test, however, this is a good time to review your installation plan for your field site.

2.2 Installing EcoWatch DCP

Choose a computer with these minimum requirements: 386 processor with 4 MB of RAM, at least one COM port and Windows® 3.1. A 3.5" disk drive is needed to load EcoWatch DCP, and you will need at least 4 MB of available hard disk space. Although these minimum requirements work, we recommend a 486DX processor with 8 MB of RAM and 2 COM ports. The EcoWatch DCP software is also fully compatible with the Pentium® processor and Windows 95® and Windows NT®. The system has also been designed and tested with current beta versions of Windows 98®.

To install on Windows 3.1:

Insert Disk 1 into your 3.5" drive. From **Program Manager**, click on **File**, then choose **Run**. In the box labeled Command Line type in "a:\setup.exe" then click on **OK**. If the disk is in drive B, change the command to "b:\setup.exe". Follow the instructions and prompts on the screen to complete software installation. Once complete, store your disks in a safe place in the event you need to reload the software at a later date.

To install on a Windows 95 or NT machine:

Insert Disk 1 into the proper drive, then click on **Start** at the bottom left of the screen, then **Run** from the submenu. In the box type in "a:\setup.exe" then click on **OK**. If the disk is in drive B, change the command to "b:\setup.exe". Follow the instructions and prompts on the screen to complete software installation. Once complete, store your disks in a safe place in the event you need to reload the software at a later date.

When you double click on the EcoWatch DCP icon, the main screen will display a window with menu bar and icons similar to the one shown below. Below is a Windows 95 illustration. Windows 3.1 will look slightly different, but not be functionally different.

There are limits to what you can do with EcoWatch DCP at this time, so you should now turn your attention to making hardware connections. If part of your 6200 DAS includes a sonde, your first use of EcoWatch DCP software will be to communicate with the sonde to set sensors and report parameters and to calibrate the sonde. This is described below in Section 2.4.

2.3 Setting Up System Components for Checkout

In this section you will find instructions for checkout installation of your entire system in the laboratory or other temporary location of your choice. Field station and base station components will be in the same room for this initial setup and checkout procedure. Your setup may differ from the one described below since the 6200 DAS was ordered to your specification. Many steps are common to all setups, therefore simply skip sensor, communication and power setup instructions that are not relevant to your system. Section 5 will go into more details about setting up each sensor in the field.

The example 6200 DAS described below contains all of the standard meteorological sensors and one sonde with the most common water quality sensors. Initially we will use a "Direct Link" (RS-232) communication option and battery power to set up and check out the system in the laboratory. If a radio transmitter has been installed in the 6200 DCP enclosure, then it is very important to install the radio antenna. For this reason the radio and antenna have been shown in the diagram below. Begin by studying this diagram, then follow the step-by-step assembly and connection instructions. If your system includes a 6-series sonde, you may want to refer ahead to Section 2.4 for initial setup information.

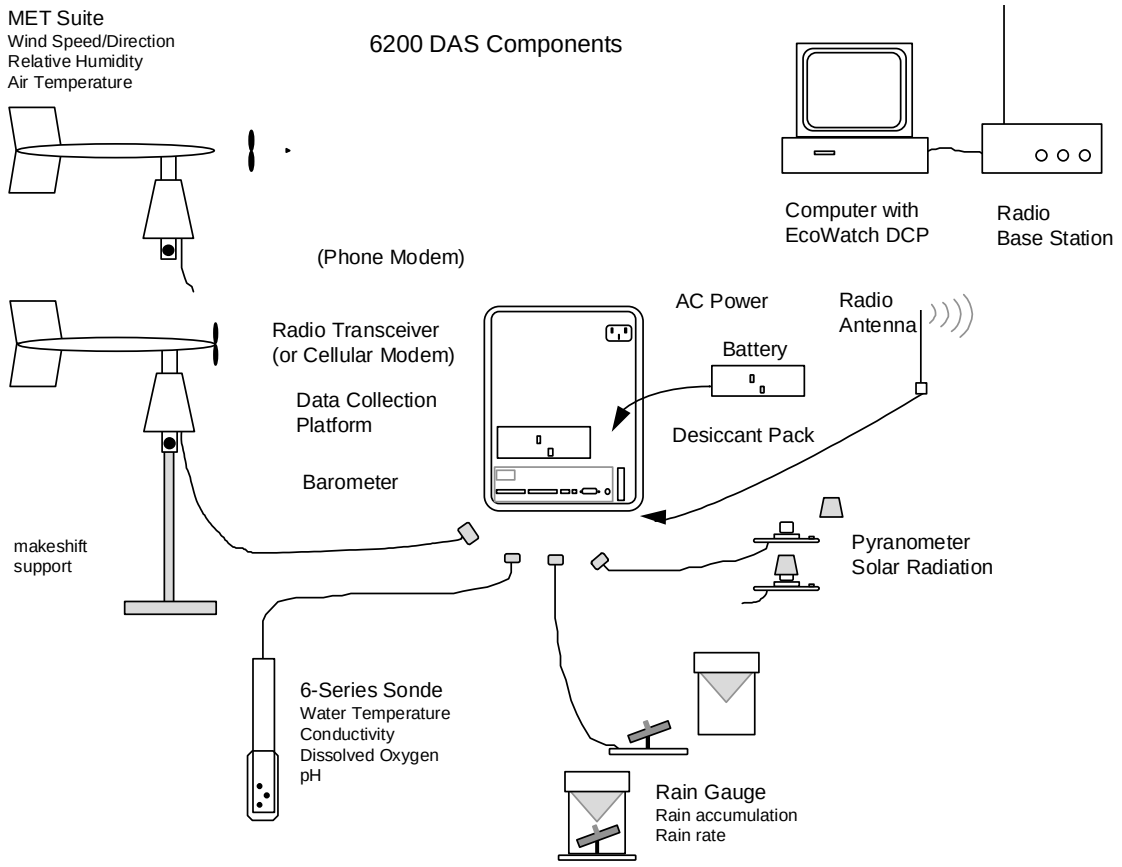

Figure 2.1 Lab Setup for Checking Out the 6200 DAS

Assuming that all shipping cartons have been opened and the equipment has been initially checked for damage, proceed by doing the following.

1. Place the 6200 Data Collection Platform enclosure on a work surface, leaving space for accessories to be laid out and connected. Position the enclosure so that the bottom (connector ports) faces toward you. Next open the hinged cover, by releasing the two latches on the right side. Refer to the diagram below, and remember that the diagram may differ slightly from your unit based on the components you ordered.

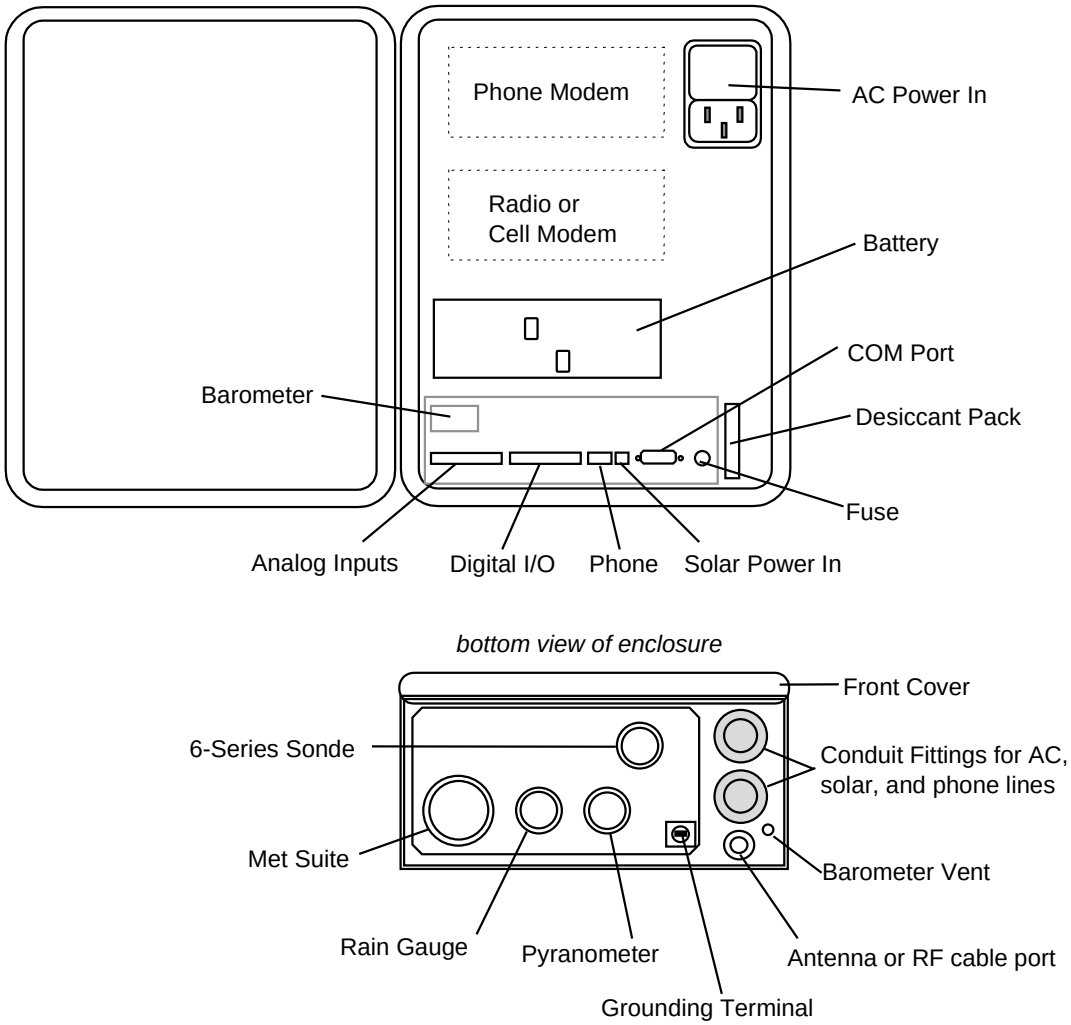

Figure 2.2 6200 Data Collection Platform, Component and Connector Layout

2. If a radio is installed in the 6200 DCP enclosure, you should locate the field antenna that you ordered and connect it to the antenna connector on the bottom of the enclosure.

CAUTION!
To avoid permanent damage to the radio transceiver, connect the antenna before powering the 6200 DCP or the radio base unit.

3. Unpack the battery and insert it into the battery slot (see Section 4.3 for details). The battery connectors are different sizes. Connect the leads, red to positive and blue to negative. After the battery is connected, the 6200 DCP should beep for a few seconds as it boots up. The battery was charged at the factory and should function without problem for this test. Later we will check the battery voltage with EcoWatch DCP software.

4. For proper testing of the Meteorological Suite sensors, you should construct a makeshift support or stand for this accessory. A 2" (5 cm) diameter rigid pipe secured to a base works well. (refer to Figure 2.1) Remove the Meteorological Suite main assembly from its packing carton. The propeller has been packed separately in the same carton. Remove the propeller, and use the finger-nut attached to the main shaft to secure the propeller to the main assembly. The molded lettering on the propeller should face out or away from the main assembly. Hold the front cone and slightly rotate the propeller to insure that it drops into the "cross" shaped channel on the cone. Finally tighten the knob on the main assembly with your fingers. Do not use excessive force. Connect this sensor to the 6200 DCP.

5. Remove the Rain Gauge from the packing carton. There is no assembly required. You may want to remove the lid, which is an assembly containing a screen or grid and funnel. In order to functionally test the rain gauge in the lab, the tipping buckets need to be accessible. In the ISCO model, unlatch the base and gently remove the cylinder/funnel assembly. In the model containing a heating element, remove the lid/funnel by lifting it off. Connect this sensor to the 6200 DCP.

6. Remove the pyranometer from its packing carton and place it on a flat surface near the 6200 DCP. Locate the certificate and save this document. It contains a calibration constant that must be entered during the sensor setup routine in EcoWatch DCP. To perform the functional test you will need to remove the plastic cap that protects the light sensing surface. Also note that a small bubble level is permanently installed in the base of this unit. During field installation, this bubble should be used for proper installation. Absolute "level" is not critical during this initial setup. Connect this sensor to the 6200 DCP.

7. Remove the 6-series sonde from its packing carton. There are several models of sondes that can be used with the 6200 DAS. Refer to Section 2.4 in this manual for a basic checkout setup. Note that this is not the complete setup and calibration procedure you would use for deployment of the sonde at a field station. EcoWatch DCP contains a menu related to sonde communication. More information for setup of the sonde is located in Section 3. Wait until section 2.4 to connect this sensor.

8. There are several options that you may use to initially establish a communication link between the data collection platform and the PC-based EcoWatch DCP software. The simplest link at this point is the "Direct Link" using the RS-232 cable provided. Plug one end of this cable into the DB-9 COM port of the 6200 DCP and the other end to a COM port of the PC loaded with EcoWatch DCP.

Naturally, you will want to functionally check the 2-way radio link, the cellular modem link, and/or the phone modem link. Refer to Sections 6 and 7 for more information. For now,

however, use the direct link to functionally check your sensors, power source, and DCP in this laboratory setup.

Your setup as described above should now appear similar to the diagram below. Note that the Radio Base Station is not connected to the system at this point, as it will be checked later.

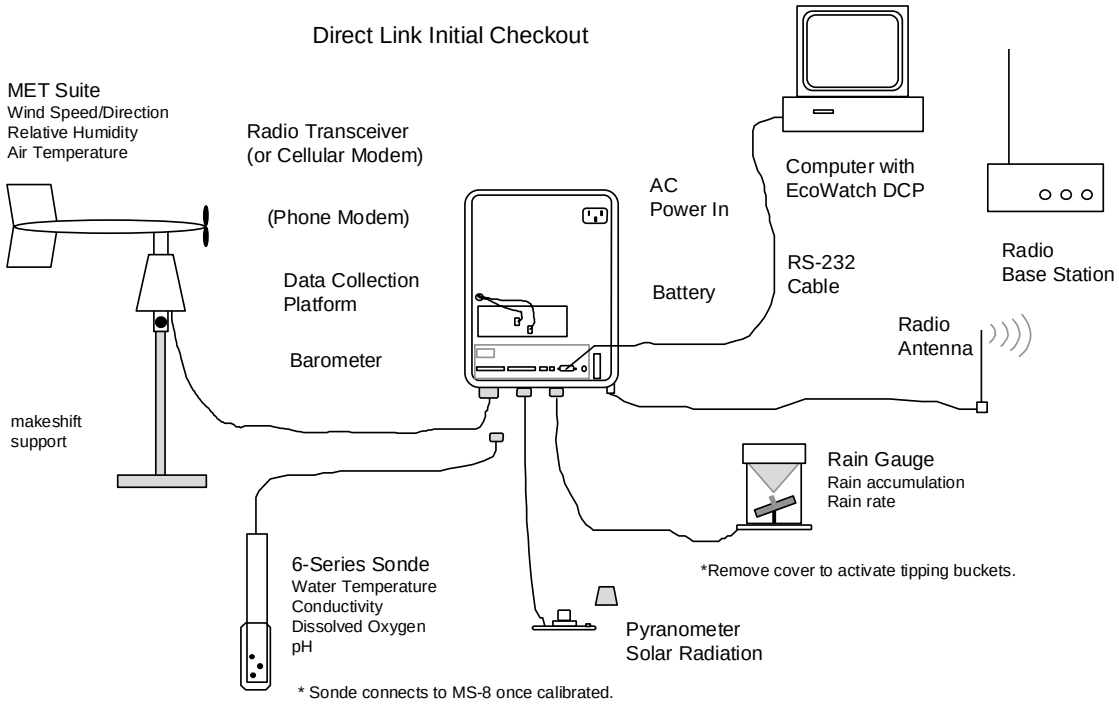

Figure 2.3 Setup and Checkout Configuration with Direct Link RS-232 (no radio)

2.4 Setting Up a 6-Series Sonde for Checkout

If a 6-series sonde is not part of the system you ordered, proceed to Section 2.5.

Below is the procedure to unpack and set up a 6-Series sonde for 6200 DCP checkout. The procedure does not include calibration of the sonde sensors. Other than temperature, the readings may seem unrealistic at this time. The objective is to familiarize you with specific sensor setup protocols, not to obtain accurate data.

For many sonde models you must physically install some of the sensors into the sonde bulkhead. You should refer to the sonde manual for details so not to damage the sensors.

CAUTION!
To avoid permanent damage to the sonde, do not submerse the sonde in water during this initial checkout.

When you remove the sonde from the shipping container, you will see that a probe guard protects the sensors. Unscrew the guard to determine the sensors installed. After checking and/or installing sensors, place the probe guard back in place to protect the sensors.

Sensors shown in this example are temperature, conductivity, dissolved oxygen and pH. It is important to know what sensors are installed for the purpose of correctly assigning sensors during setup.

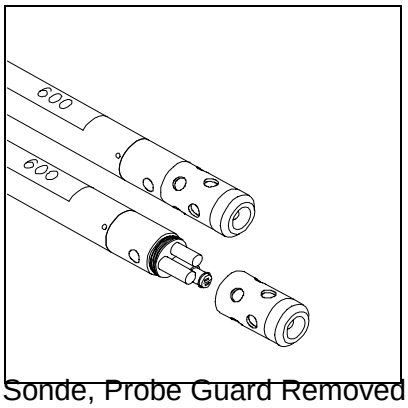

Figure 2.4 600 Sonde, Probe Guard Removed

In order to setup your sonde, you must connect the sonde to your PC and communicate through EcoWatch DCP. The diagram below helps describe this connection.

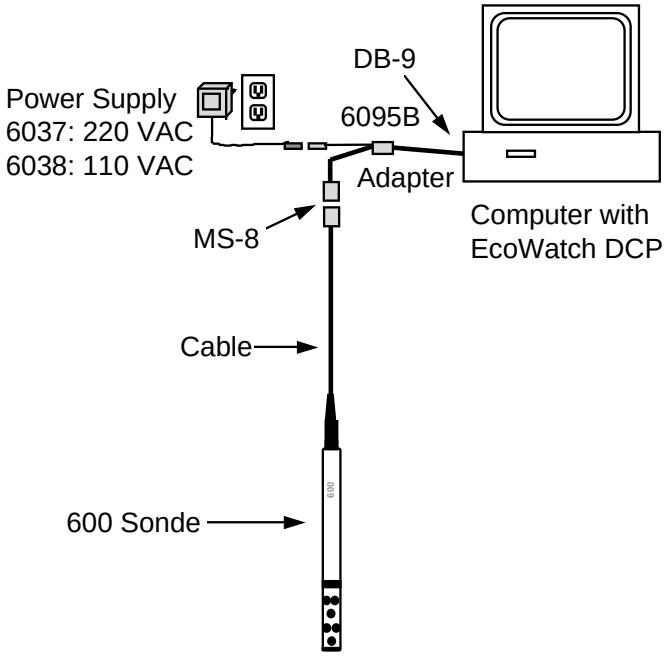

In addition to the sonde, you need a cable. The cable may be a field cable permanently attached to the sonde or you may need to connect a separate field or cal cable to the bulkhead connector of the sonde.

Regardless of the type, the cable terminates in an MS-8 connector. Many sondes also require power in order to communicate with the PC-based software. A 6095B Adapter and a 6038 (or 6037) Power Supply may be needed to make the connection. The PC-end of the adapter is a DB-9 which is a typical COM port connector. If your PC has a DB-25 connector, you will need another adapter (25 to 9 pin).

Figure 2.5 Sonde to PC Connection

Identify your COM port, for example, COM 1, COM 2, etc. You need this information to establish communication between the sonde and EcoWatch DCP. If your COM port is not clearly marked, assume that it is COM1 for now. You can reconfigure for COM2 (or other COM port) if communication is not established during setup.

You should now open the EcoWatch DCP program. If you have not installed it yet refer to Section 2.2, Installing EcoWatch DCP. Click on the **Comm** top line menu, then **Settings…** Verify that the settings match the table.

Baud	9600
Data	8 bits
Parity	None
Protocol	Kermit
Handshaking	XonXoff

Once complete with this window click on **OK**.

Now return to top line menu and click on **Comm**, then choose **Sonde** from the submenu. Select your COM port and press **OK.** You will now see a window labeled Sonde – COM1.
The # sign should appear (see below). Type in **"menu"**. When you press Enter, you will enter the main sonde menu. It will appear similar to the screen below. Any difference is related to the model of sonde you are using.

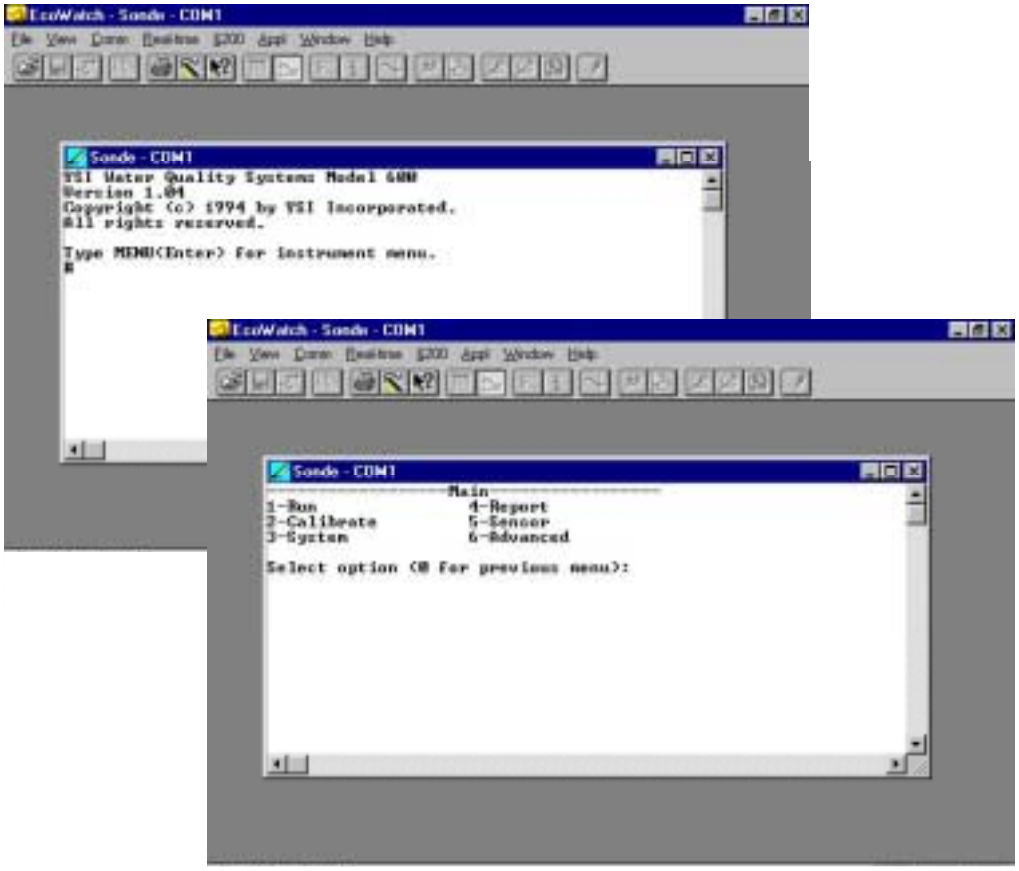

If you are unable to establish interaction with the sonde, make sure that the cable is properly connected, power is applied (e.g., 6038 Power Supply or other 12 VDC source), and that the COM port settings are set correctly. If you were unsure of your COM port number, reassign another port number and repeat the steps above.

The sonde software is menu-driven. Select a function by typing its corresponding number or character. It is not necessary to press Enter after a number/character selection. Use the 0 or Esc key to return to a previous menu. The mouse does not interact with the sonde menus.

NOTE
If a single keystroke yields no response on the screen, press the key again. You should now see a reaction. This occurs when a key is not pressed for a period of time sending the sonde into a "sleep mode". The first press of any key "wakes" up the sonde and the second press activates the command.

In order to properly assign sensors and parameters for the sonde, follow the step-by-step instructions below. You need not fully understand each submenu at this time, but you should configure your sonde menu to appear very similar to the screens shown below. The illustrations below may differ some from your screens, since sonde menus vary somewhat from model to model.

1. From Main menu press **3**-System, then **1**-Comm setup. This allows you to confirm baud rate at **9600**, which is the default value. Refer to the screens below. Note also that the SDI-12 address of the sonde is **0** by default. You may assign any character between 0 and F to provide a specific address for your sonde. This will be of particular importance in multi-sonde applications involving the 6200 DAS. For now, maintain the "0" address designation. Press **0** to return to previous menus until you return to Main.

```
-----------------Main-----------------
1-Run                4-Report
2-Calibrate          5-Sensor
3-System             6-Advanced

Select Op
```

```
-----------System-setup-----------------
1-Comm setup
2-Page length=25
3-Instrument ID
4-SDI-12 address=0

Select Option (0 fo
```

```
--------------Comm-setup--------------
1-(*)Auto baud      5-( )2400 baud
2-( )300 baud       6-( )4800 baud
3-( )600 baud       7-(*)9600 baud
4-( )1200 baud

Select Option (0 for previous menu):
```

2. From Main menu press **5**-Sensor, to enter the menu that allows you to assign installed sensors. In the example we are selecting four sensors which were shown earlier in Figure 2.4. To change an assignment press the number of the sensor. The * indicates that the sensor is activated. After assigning sensors press **0** to return to Main.

```
-----------------Main----------------
1-Run                4-Report
2-Calibrate          5-Sensor
3-System             6-Advance

Select Option (0 for previous
```

```
------------Sensors enabled------------
1-(*)Temperature    5-(*)ISE1 pH
2-(*)Conductivity   6-( )ISE2 NONE
3-(*)Dissolved Oxy  7-( )ISE3 NONE
4-( )Pressure-Abs

Select Option (0 for previous menu):
```

3. From Main menu press **4**-Report, to enter the menu that allows you to assign the parameters and the units of your choice. In the example we select five parameters...one temperature, one conductivity, one pH and two for DO. After assigning parameters press **0** to return to Main.

```
-----------------Main----------------
1-Run                4-Report
2-Calibrate          5-Sensor
3-System             6-Advance

Select Option (0 for previous
```

```
--------------Report setup-------------
1-(*)Temp C         A-( )Resist Ohm*cm
2-( )Temp F         B-( )TDS g/L
3-( )Temp K         C-( )TDS Kg/L
4-( )SpCond mS/cm   D-( )Sal ppt
5-(*)SpCond uS/cm   E-(*)DOsat %
6-( )Cond mS/cm     F-(*)DO mg/L
7-( )Cond uS/cm     G-( )DOchrg
8-( )Resist MOhm*cm H-(*)pH
9-( )Resist KOhm*cm I-( )pH mV

Select Option (0 for previous menu):
```

4. From Main menu press **6**-Advanced, then **2**-Setup. Verify that the screen below matches what you see. It is very important that the Auto sleep options are activated, especially when the sonde is being set up for deployment. For more details see Section 3 and your sonde manual.

```
----------------Advanced---------------
1-Cal Constants     3-Sensor
2-Setup             4-Data

Select Option (0 for prev
```

```
-------------Advanced setup------------
1-(*)VT emulation
2-( )Power up to Menu
3-( )Power up to Run
4-( )Comma Radix
5-(*)Auto sleep RS232
6-(*)Auto sleep SDI12
7-( )Multi SDI12

Select Option (0 for previous menu):
```

Press **0**'s to return to the statement that asks you to press Y or N to exit the sonde menu. Press **Y** to exit the sonde menu. Close the Sonde-COM1 window and disconnect the adapters and cables. Now you should connect the 6-series sonde to the 6200 DCP.

2.5 Configuring the 6200 DCP using EcoWatch DCP

All sensors connect to the 6200 DCP (Data Collection Platform). The DCP electronics physically reside inside the NEMA 4X enclosure. You should now have all of your sensors connected and a "direct link" RS-232 cable running from the 6200 DCP a COM port on your PC (COM1 in our example). You should have an antenna or RF cable connected to the antenna connector on the 6200 enclosure and you should have installed the battery and connected the power leads to positive and negative terminals. You are now ready to create a file, configure the data collection platform, and begin collecting data using EcoWatch DCP. Follow the step-by-step instructions below to proceed.

Start by opening EcoWatch DCP, if it is not already running.

From the main screen click on the top line menu labeled **6200**, then click on **New...** to bring up the screen titled "Save 6200 DCP Configuration File As" Type in a filename of your choice (8 character maximum).

In the figure below the filename "**checkout.s62**" has been entered. Actually three configuration files (.s62, .zcf, .ini) will be opened and saved in the location shown (c:\ecowwin\sys6200). You have the option to direct the .s62 file to a location of your choice, but we recommend that you accept the default path. Click on **OK** to proceed.

Once you click on OK several status screens will appear indicating that EcoWatch DCP is attempting to detect the 6200 DCP and its sensors. The screens are part of an autoconfiguration routine that searches for SDI-12 sensors (sondes) and MET sensors (meteorological sensors). The screens are titled “6200 DCP ConfigWizard”. An example below shows that a sonde with SDI-12 Address 0 has been detected after scanning addresses 0 to 8. EcoWatch DCP searches from Addresses 0 to 9, by default. The sonde with the address of 0 will be the only address detected in your checkout procedure.

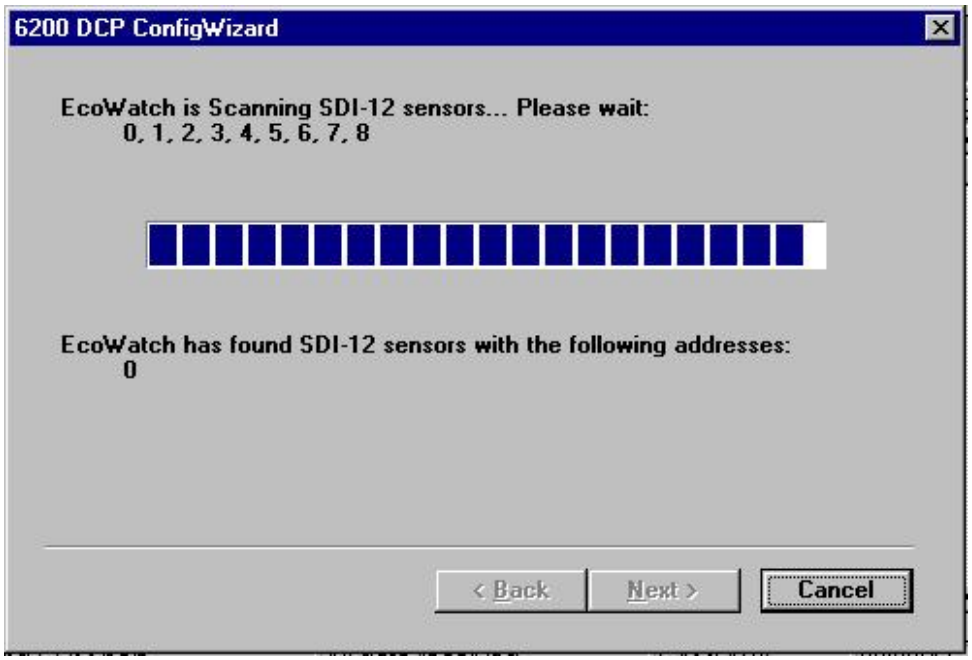

After completing the scan of SDI-12 sensors, the software switches to a ConfigWizard screen that shows the status of the scan of meteorological sensors. If a MET sensor requires entry of a calibration constant, a screen appears. Only the solar radiation sensor and barometer sensor require a calibration constant, which is provided in the sensor literature or included in the back of the manual. Each time you make a New 6200 file you will need to enter these calibration constants. A good place to save these calibration constants is with the manual. Below you see the MET status window and the screen for entering the calibration constants for the solar radiation sensor (pyranometer) and the barometer.

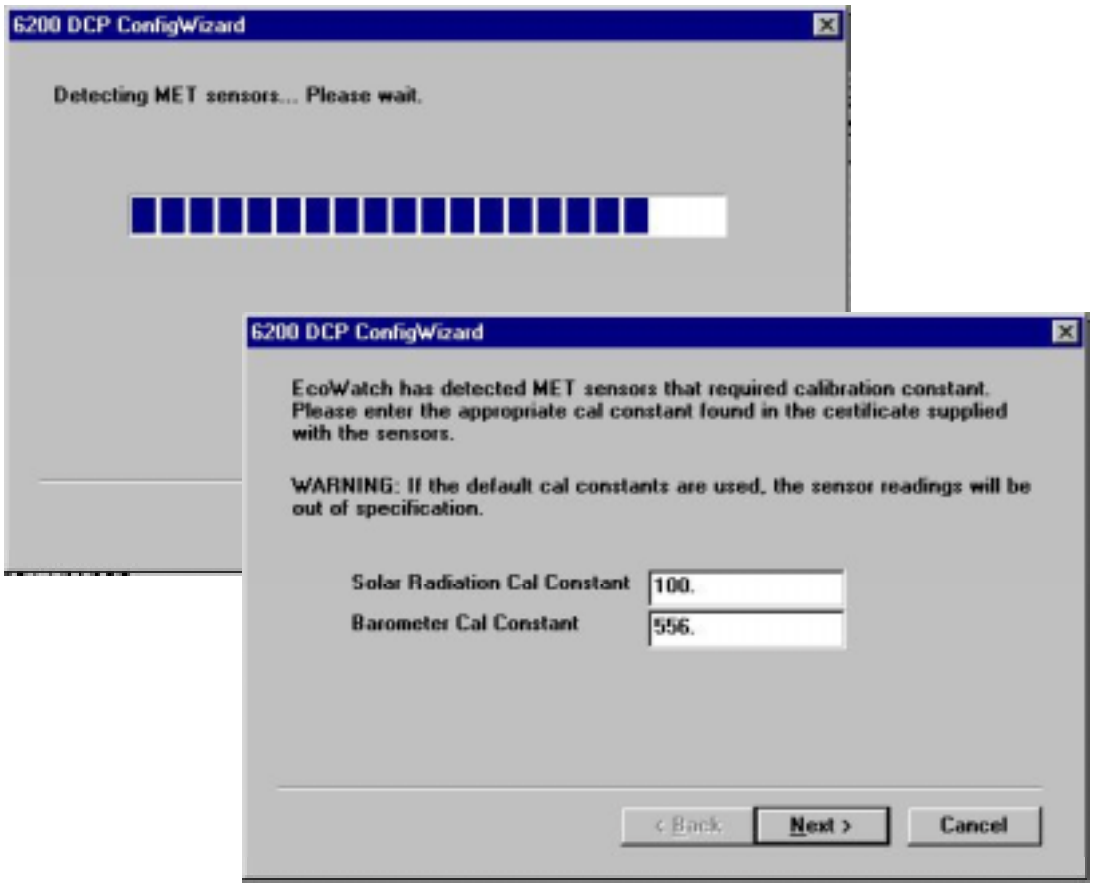

Enter the numbers from the certificates, then click on **Next** and proceed to the next screen in ConfigWizard.

The next choice relates to the communication option that you will be using for this particular file. For example, if you ordered a system with a 2-way radio, click on the appropriate circle. Remember that even though you may be “directly” communicating with the 6200 DCP field station during configuration, you must choose the mode of communication you **will use for field installation.**

In our laboratory setup and checkout procedure we will be initially communicating directly via RS-232 cable. Therefore the default choice shown below is correct. Click on **Next** to proceed.

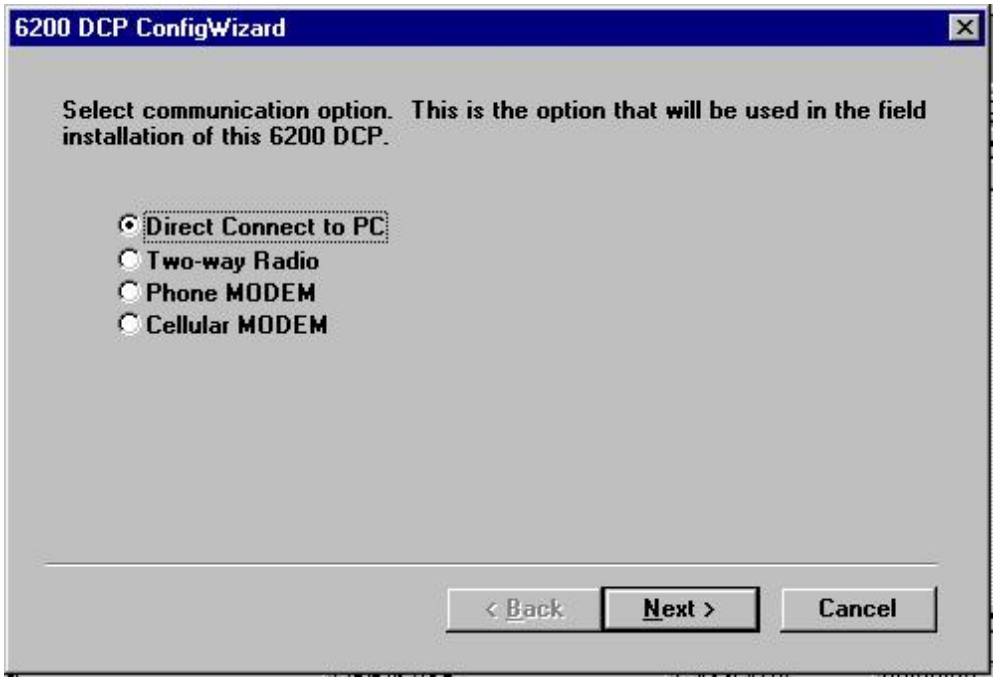

EcoWatch DCP now completes its configuration of the 6200 DCP. See the example screens below.

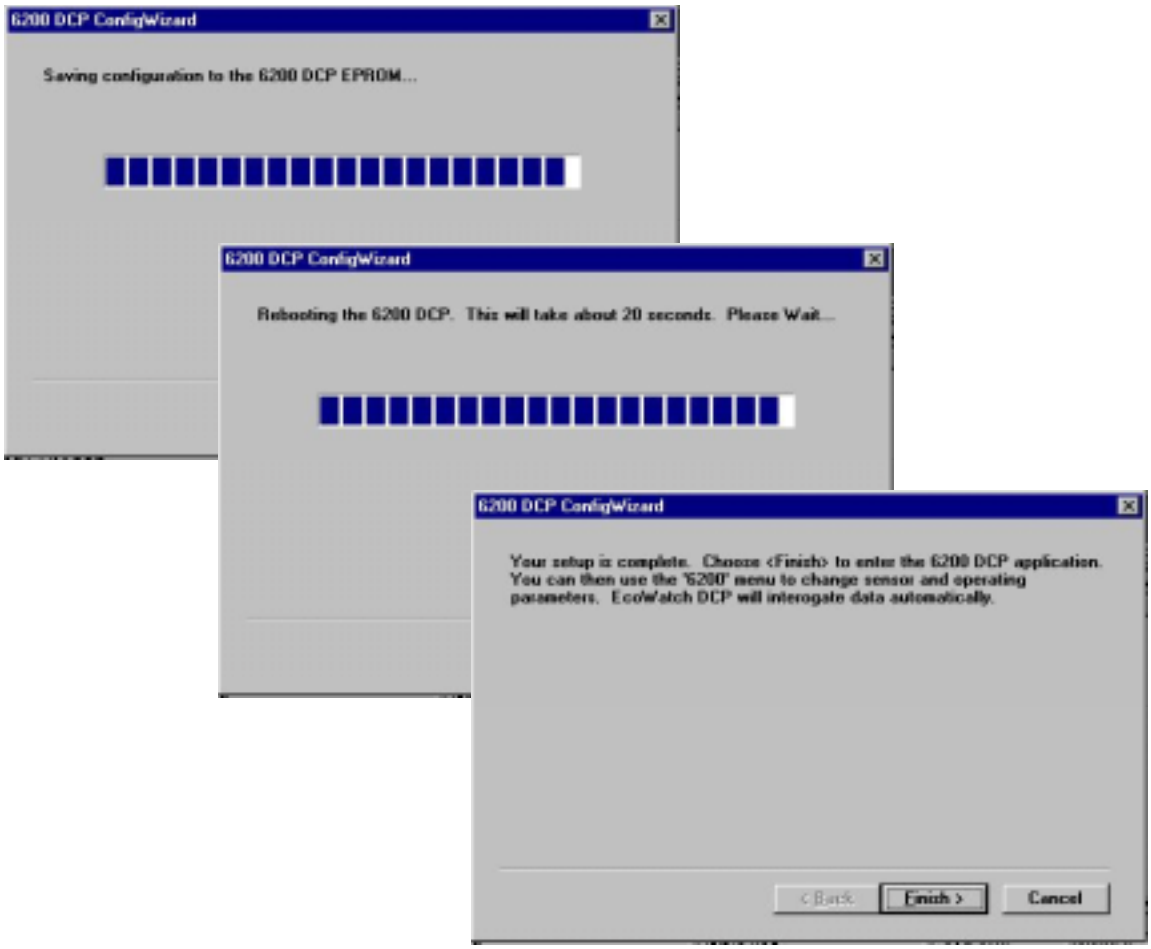

The last step EcoWatch DCP will do is to reboot the 6200 DCP, and you should hear a long beep. After you click on **Finish**, a report form similar to the one shown below appears on the screen.

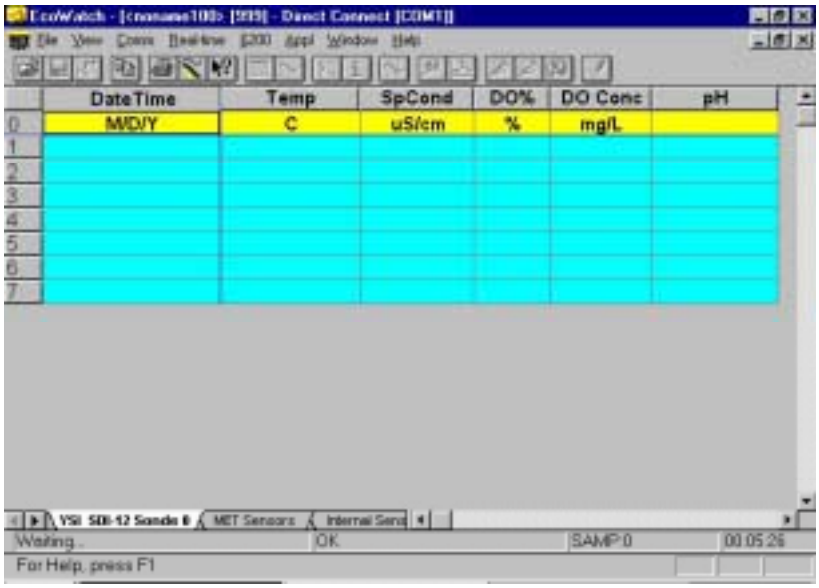

2.6 Testing the 6200 DCP

At this point you have connected the 6200 DCP components, installed EcoWatch DCP and run the ConfigWizard. You are ready to begin collecting data and display it on EcoWatch DCP. In order to perform a test that provides data in a timely manner for testing, click on **6200**, then **6200 DCP Setup**. The following screen should appear.

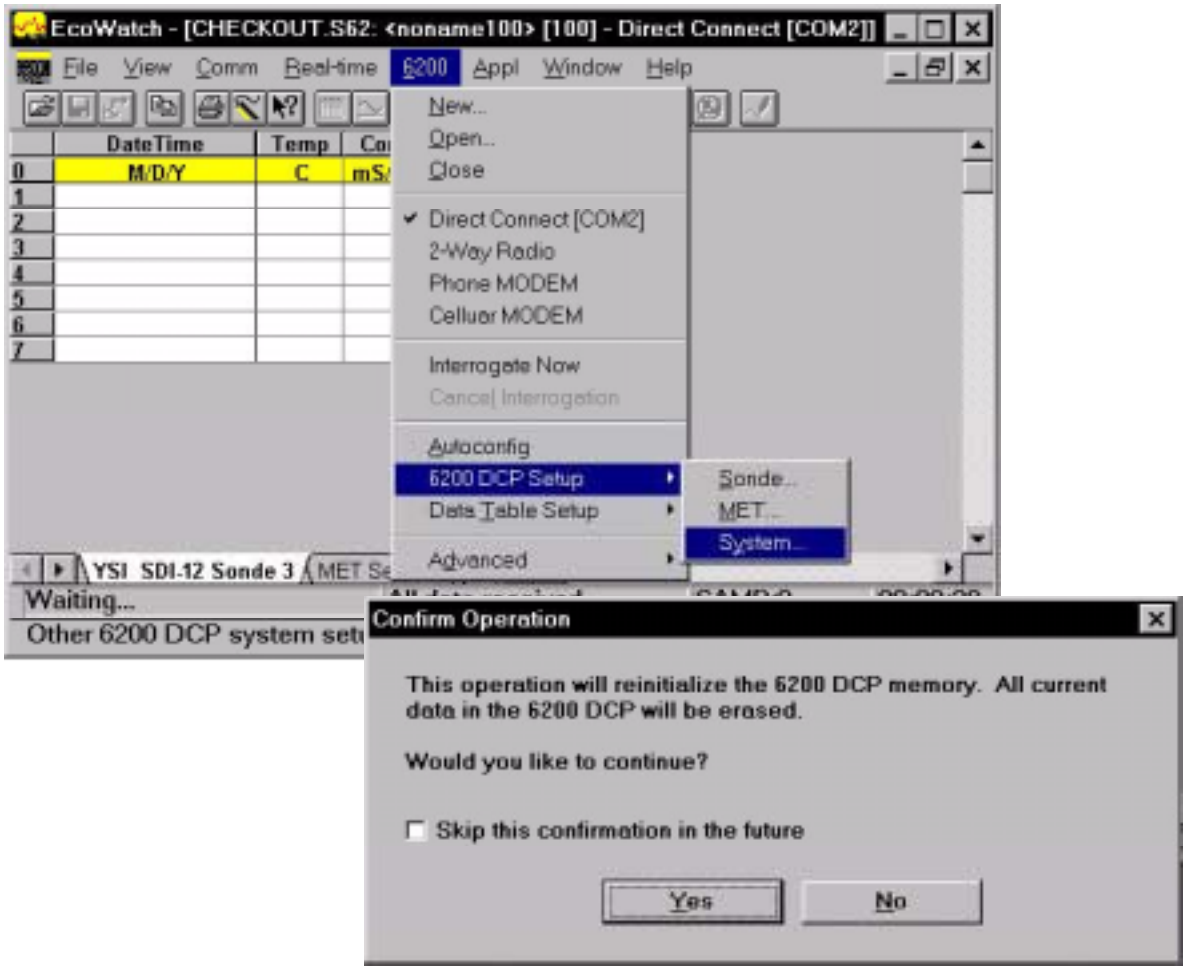

Click on **System…** to open the window related to system settings. A message will appear to alert you that any data remaining in memory in the 6200 DCP will be erased if system settings are changed. This does not mean that data already uploaded to EcoWatch DCP will be lost. See Section 7 for more details on the consequences of changing system or sensor settings.

Click on **Yes** to continue and notice that there are two "folders", Site/Timing and Communication/Power. Site/Timing will appear first and the Description box will be highlighted. By default, it reads <noname100>. The number 100 is the number EcoWatch DCP has assigned this field station, and may be any number between 100 and 999 since this value increments each time a new field station is setup. You may type in a description of your choice or you may tab to the next box, thereby accepting the default description. The next box is Sample Interval, that is the time that elapses between samples being logged to the data collection platform (DCP). The default value is 15 (minutes). Do not confuse this with

EcoWatch DCP interrogation timing. Even when EcoWatch DCP is not running, the DCP continues to log data to its memory once it has been configured.

The next selection gives you the choice of interrogating the DCP at the same rate as the sample interval or, alternatively, choosing some number of minutes independent of the DCP sample interval. For the 6200 Test, set the interrogation schedule to "Same as Sample Interval" by clicking on the box just to the left of this choice. Also change the Sample Interval to **2** or **3** minutes during the checkout routine in order to collect readings more quickly.

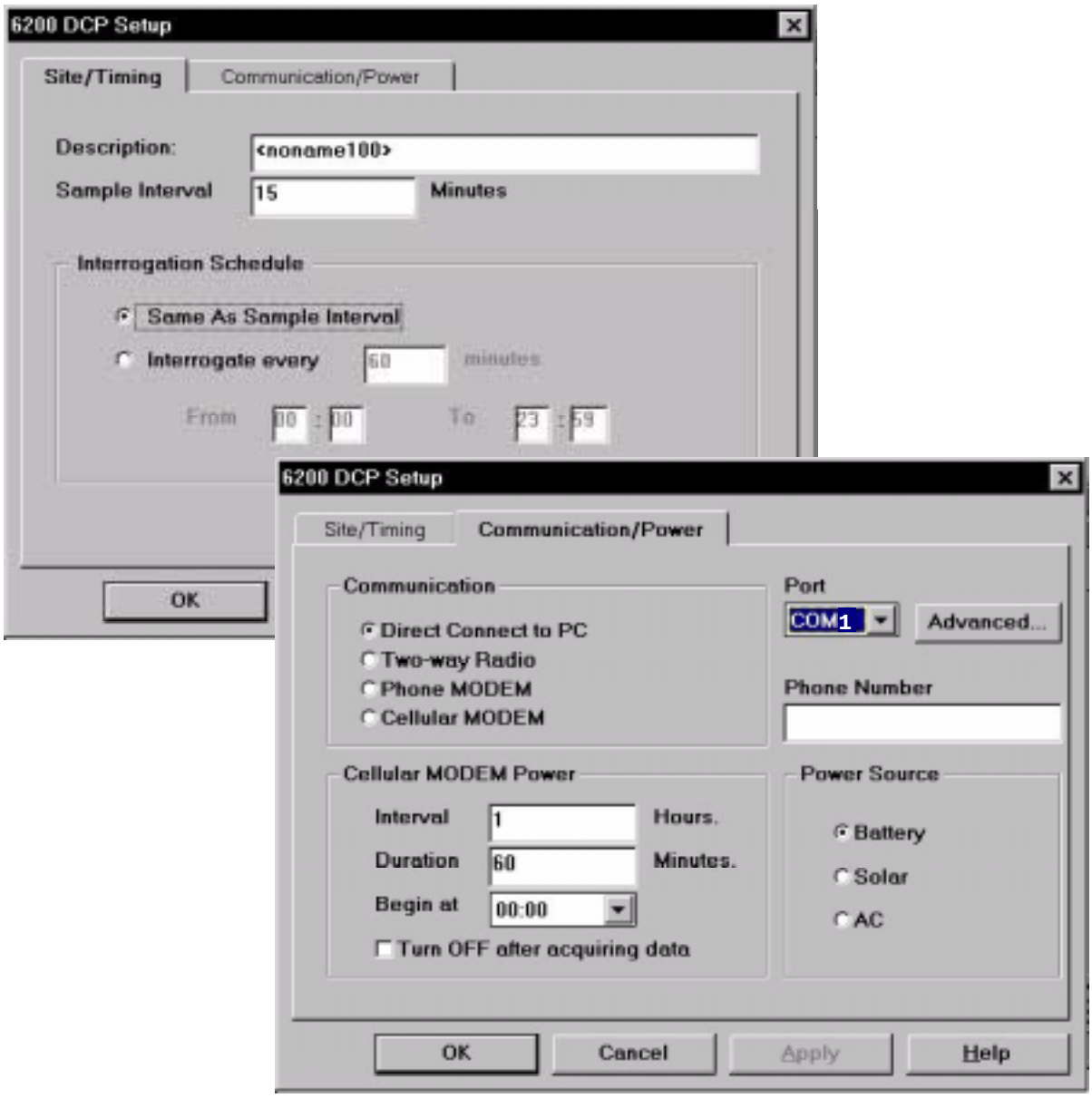

Now click on the **Communication/Power** folder and verify that communication is Direct Connect to PC and the COM port agrees with the serial port to which you are connected (COM1 in our example screen). The power option should be Battery. The information related to MODEM communications is not relevant at this point.

Click on **OK** to exit the menu and return to the main EcoWatch DCP menu screen. A window appears momentarily, displaying the message Programming 6200...Please Wait. When EcoWatch DCP is done downloading the new configuration it will reboot the 6200 DCP. You should hear a long beep from the 6200 DCP as it starts up again.

Once the main menu appears, click on **6200** to pull down the menu and click on **Interrogate Now**. Any data that has been collected by the DCP will appear. If readings do not appear initially, you will need to wait as much time as the sample interval you chose above. A countdown timer in the lower right corner of the window will give you the time to next interrogation.

Below you see readings that have been uploaded to EcoWatch DCP from the 6200 DCP. Up to seven lines of data may be displayed at one time, the bottom line being the most current. Note that there are three separate display "sheets". Simply click on the sheet label near the bottom of each window to view readings from YSI SDI-12 Sonde 0, MET Sensors, or Internal Sensors. You can not display all sensor readings in one window simultaneously.

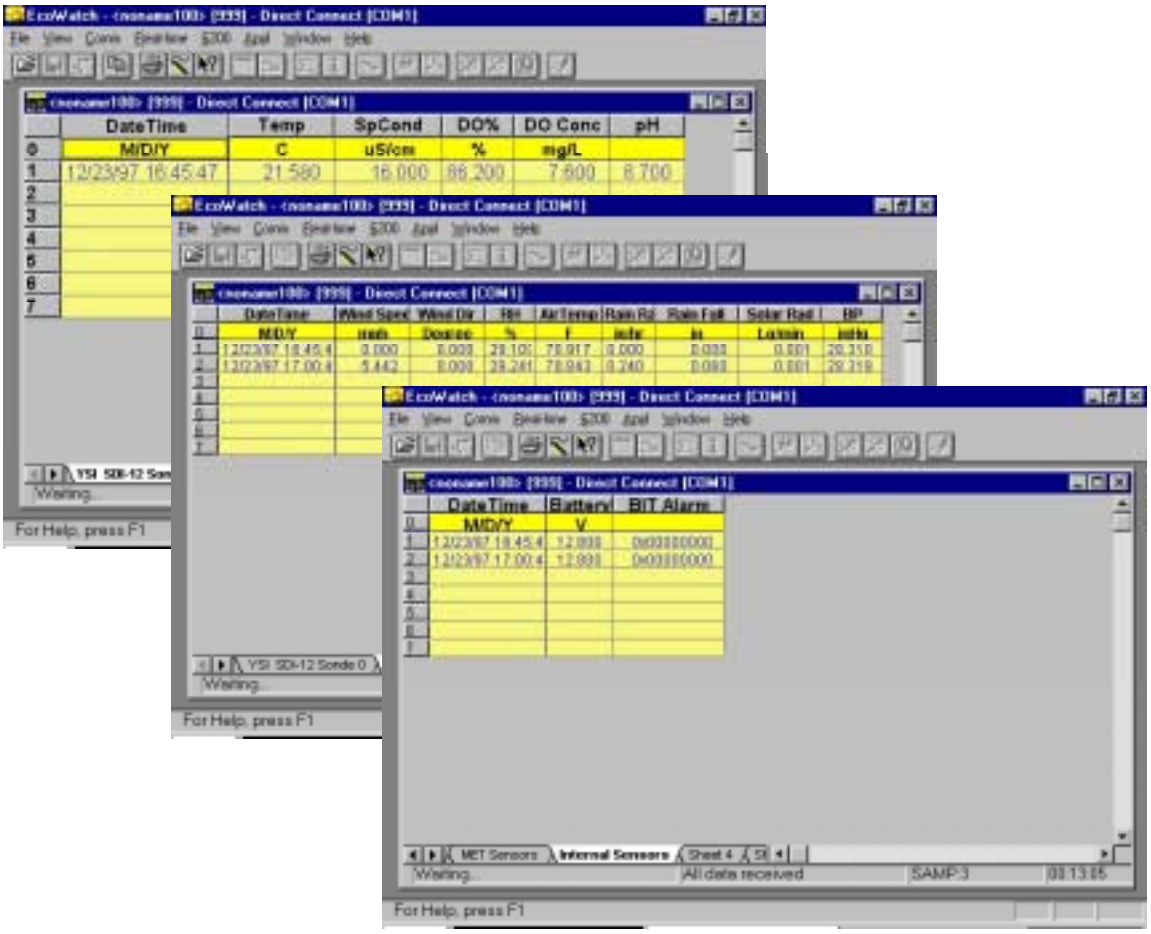

If you have difficulty viewing the readings on a sheet, you have two options. One...click and hold on a vertical line that separates description headers. While holding the mouse button down you can resize the column width. Two...Click on **6200**, **Data Table Setup**, **Font/Color...** The default font/size is Arial/11. Change this to suit your needs. For example, changing the size from 11 to 9 will fit more information on one screen without the need to scroll.

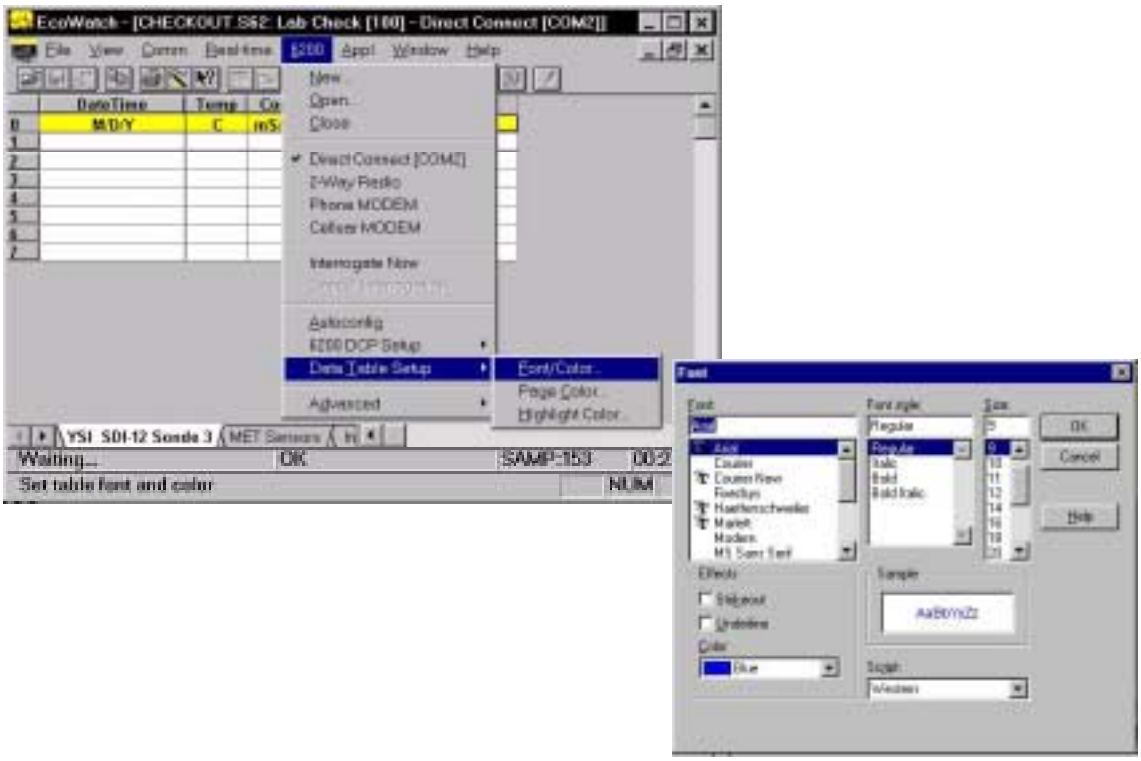

2.7 Testing Sensor Function

Now that you are able to view readings, you may wish to perform some preliminary tests of sensor function. As you have seen some readings display 0.000 in the checkout testing. For example, rain fall and accumulation, wind speed and direction and solar radiation probably have zero readings. Here are some quick tests you can perform.

For wind speed/direction locate the plastic arrow protruding from the MET Suite head assembly. Rotate the MET head assembly on the support so that the arrow points north (0 degrees). East would be 90, south 180 and west 270 degrees. Direction will <u>not</u> be displayed unless there is measurable wind speed. To check wind speed set up a small fan to provide continuous air motion in front of the propeller. During interrogation of the 6200 DCP, EcoWatch DCP will upload readings showing wind speed and direction. In the example below the wind speed is about 5.4 mph and the direction is 0°, which is due north.

For rain rate/accumulation testing, remove the top assembly of the rain gauge to locate the tipping buckets. Carefully tip the buckets from one position to the other 5 to 10 times in

succession. During the next sampling period, a rain fall between 0.05 and 0.10 inch should appear after interrogation. A rain rate, calculated based on accumulation per unit time also appears. For example, an accumulation of 0.06 inches in 15 minutes translates to a rate of 0.24 in/hour (4 15-minute intervals per hour, or 4 x 0.06).

For solar radiation remove the cap/dust cover and expose the sensor to natural light during the test period.

Other sensors should be producing values that indicate functionality. For example, the sonde temperature value should approximate room temperature. Relative humidity should be realistic for your room conditions. Barometric pressure should approximate a reading uncorrected for sea level. That means if you are not at sea level, altitude will cause a discrepancy between your reading and the local weather bureau's reading. If possible, use a calibrated laboratory barometer to check for accuracy.

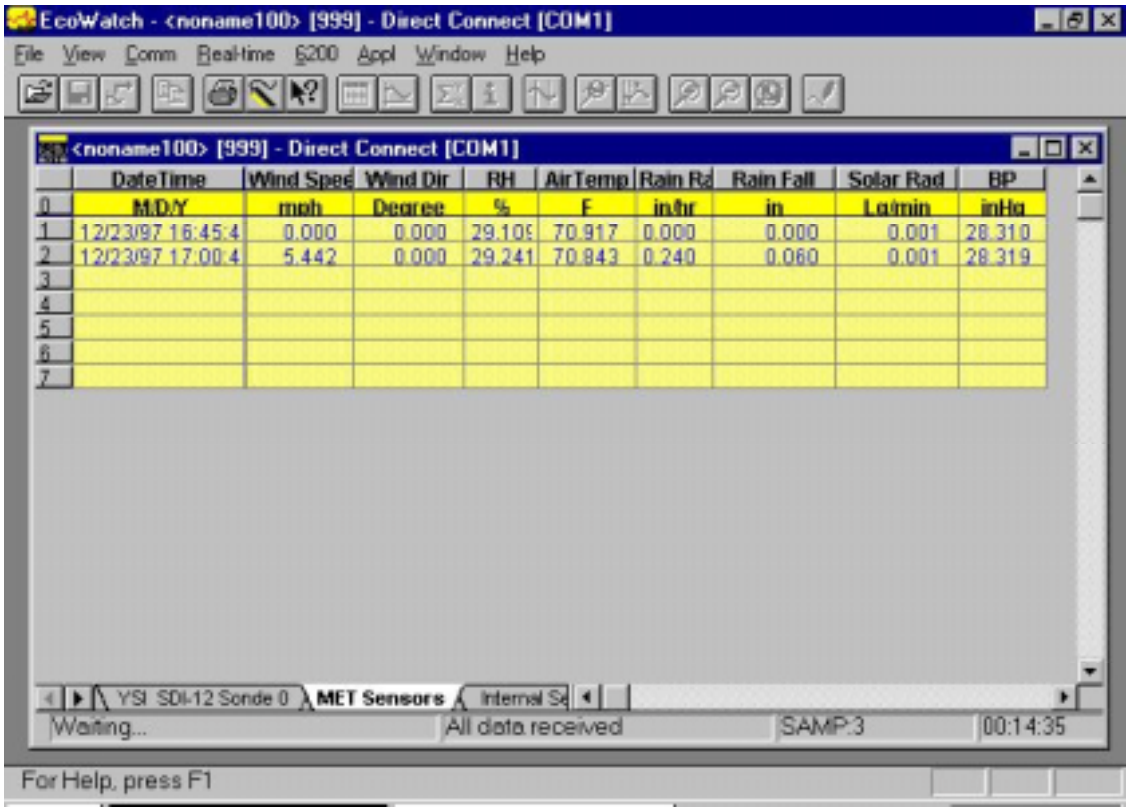

2.8 Displaying Data in EcoWatch DCP

After you have uploaded several sets of readings into EcoWatch DCP, close the 6200 file by choosing **6200**, then **Close**.

Data files in EcoWatch DCP have a ".DAT" extension, unlike the 6200 DCP files which have ".S62" extension. There is one data file generated for each set of sensors (SDI-12 Sonde, MET and Internal). Each data file contains encrypted information related to time and identity of the file. Using the data file below as an example (1077BM00.DAT), note the following...

107 The field station number, assigned by EcoWatch, and incremented with each new field station.
7 The last number of the year, for example, 199**7**
B The month of the year where 1=January, 2=February and so on to 9=September A=October, **B**=November and C=December
M Type of sensor where S=SDI-12 sonde, **M**=MET, I=Internal (eg, battery voltage)
0 SDI-12 Sonde Address, for example, Sonde Address **0** as shown above
0 Number indicating the set of data opened for a given record, **0**=initial set. If you change a report parameter or measurement unit for a file, the number increments to 1, 2, 3… a, b, c… and so on.

Use the **File** command on the top level menu of EcoWatch DCP, then **Open**. Select the drive and subdirectory where the data files are located, usually **c:\ecowwin\data**. Highlight or click on the data file of the field station number and sensor type you wish to observe, then click **OK**. Below you see meteorological data for record 107 collected on November 18, 1997. Readings were collected every 2 minutes as part of a checkout procedure. Note the wind and rain events on the graph. By default, EcoWatch DCP opens the data file in graphical format with one parameter per graph. Autoscaling defines the upper and lower limits.

There are many options for displaying, reporting, and generally customizing the data in EcoWatch DCP. This is discussed in detail in Section 7. The objective of this section is for you to become generally familiar with this plotting/reporting software.

If you hold down the right mouse button you can scan through the data and show the actual readings correlating events with times. See the example below, which shows wind speed/direction events on the left side of the graph. We created these events in the 6200 DCP checkout procedure by spinning the propeller during the sensor reading period. Note that the wind speed/direction is zero for all other times.

To observe actual data records, click **View**, **Data Table** from the pull-down menus. After a while you will learn to use the icons and variety of other techniques for viewing, plotting and reporting data.

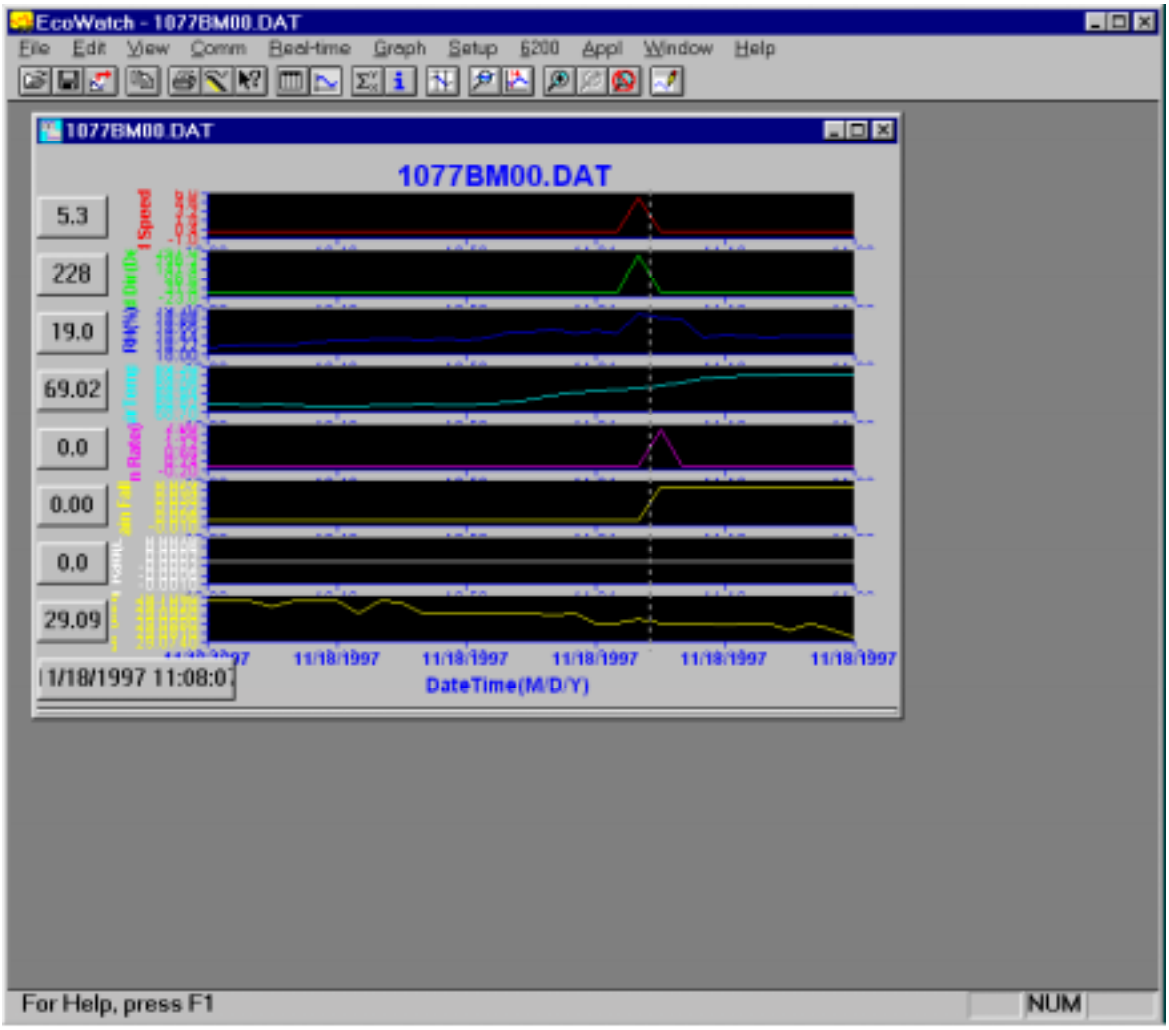

This completes the Getting Started section of the manual. You should now take time to become thoroughly informed about the 6200 DAS by reading all sections of the manual that pertain to the specific system you have received. Not all sections apply since there are a number of communication, power and sensor options.

<u>IMPORTANT!</u> Before continuing, remember that the DCP continues to collect data from the sensors at whatever interval you set (e.g., every 2 minutes). The DCP will continue collecting data at this rate until the battery runs down to an unusable level or until you reconfigure the DCP to collect at a different interval. We recommend that you return to the **6200** menu, **Open** the file checkout.s62 (or other name that you assigned) and from the **6200** menu, **6200 DCP Setup, System…** submenu and change the **Sample Interval** to a larger number (60 minutes or more). This change conserves power and will help extend the life of some of the sensors (DO, for example). If the battery power level drops too low, the 6200 will automatically turn off.

Section 3
Setting Up a 6-Series Sonde

3.1 Introduction

This section is designed to familiarize you with the settings a 6-Series Sonde must have to work with the 6200 DAS. It will also describe how to access the sonde menus through EcoWatch DCP. You should refer to the sonde user manual provided with each sonde to learn more about setup and calibration of your particular sonde model.

By the end of Section 3 you will have...

- Connected your sonde to the PC and verified communication
- Prepared the sonde to communicate with the 6200 DCP
- Enabled the sensors, selected appropriate report parameters and calibrated the activated sensors for field deployment

Successful completion of the above list is essential before you deploy a sonde in the field. If you read Section 2 Getting Started, some of the following information will be redundant. However, in the previous section the main objective was to check out the 6200 DCP. In this section the focus turns to proper setup of the sonde for field deployment.

3.2 Communicating with a Sonde

The most common configuration for communicating with your 6-Series sonde will be through a PC loaded with EcoWatch DCP software. You also have the option to use the YSI 610-D or 610-DM handheld display. The 610 has a communication mode which allows you to configure parameters, display readings and calibrate sondes. The 610 is also battery-powered and water-resistant, which makes it very useful for sonde calibration performed at a field station, especially when AC power is unavailable.

Below are hardware illustrations and lists of parts required for both PC and 610 configurations. For the purpose of describing sonde setup and calibration we will need a PC with EcoWatch DCP and encourage you to perform this in the laboratory or similar location. If you choose to use a 610 for calibration, refer to the manual provided with the 610. Note that when accessing the sonde software with either PC or 610, the menus are virtually identical.

EcoWatch DCP is designed to allow you to fully control the 6200 DCP field station. It also has all of the functionality of standard EcoWatch which includes a terminal for setting up and calibrating a sonde. Some features of a sonde can be set through EcoWatch DCP such as turning sensors on or off and determining what parameters to report. However, calibrating the sonde can not be done through the 6200 DCP. You will need to either bring the sonde into the lab or use a 610 in the field for calibration.

6-Series Sonde to Lab Computer

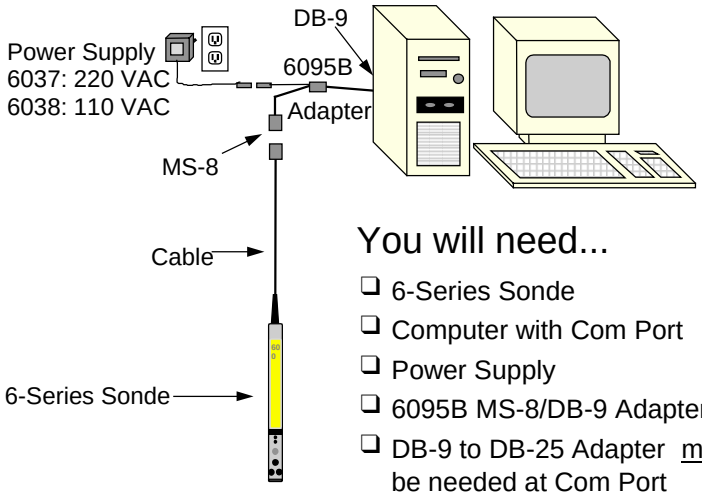

You will need...

- ❑ 6-Series Sonde
- ❑ Computer with Com Port
- ❑ Power Supply
- ❑ 6095B MS-8/DB-9 Adapter
- ❑ DB-9 to DB-25 Adapter <u>may</u> be needed at Com Port

6-Series Sonde to 610 Display/Logger

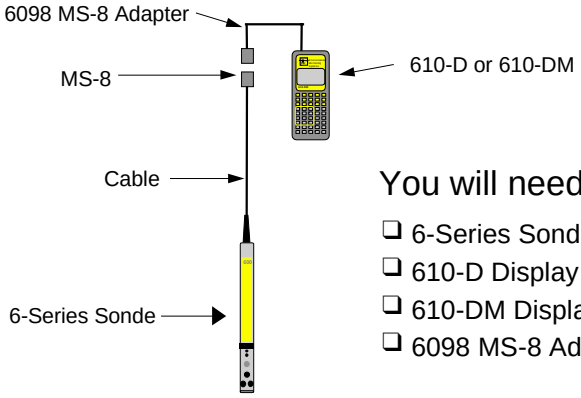

You will need...

- ❑ 6-Series Sonde
- ❑ 610-D Display <u>or</u>
- ❑ 610-DM Display/Logger
- ❑ 6098 MS-8 Adapter for 610

YSI 610's operate on rechargeable batteries.
Each 610 comes with a 110 VAC Wall Socket Charger Unit.

3.3 Connecting a Sonde to a Computer with EcoWatch DCP

In order to assign sonde sensors, report parameters, sonde address and various “advanced” parameters, you will need to connect the sonde to your PC (or 610) and communicate through EcoWatch DCP. The diagram below helps describe this connection.

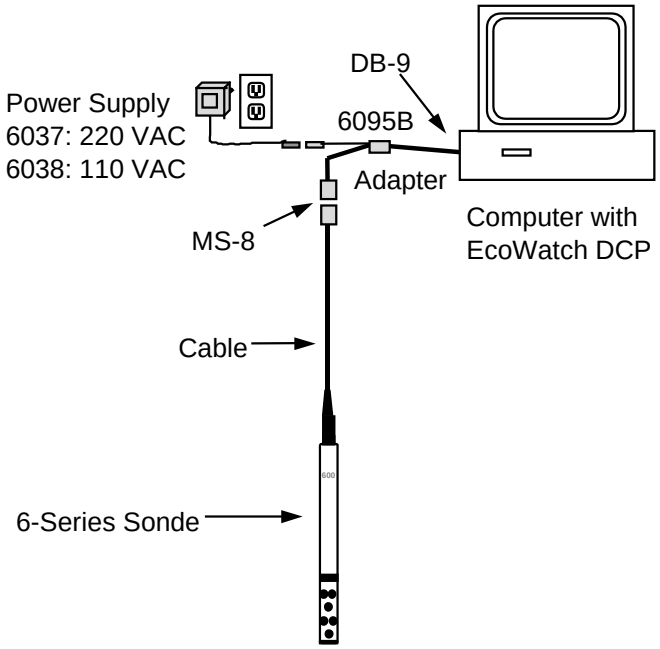

In addition to the sonde, you need a cable. The cable may be a field cable permanently attached to the sonde or you may need to connect a separate field or cal cable to the bulkhead connector.

Regardless of the type, the cable terminates in an MS-8 connector. Many sondes also requires power in order to communicate with the PC-based software. A 6095B Adapter and a 6038 (or 6037) Power Supply are required to make the connection. The PC-end of the adapter is a DB-9 which is a typical COM port connector. If your PC has a DB-25 connector, you will need another adapter (25 to 9 pin).

Figure 3.1 Sonde to PC Connection

Identify your PC COM port, for example, COM 1, COM 2, etc. You need this information to establish communication between the sonde and EcoWatch DCP. If your COM port is not clearly marked, assume that it is COM1 for now. You can reconfigure for COM2 (or other COM port) if communication is not established during setup.

Following the diagrams and information above connect your sonde to your PC.

Run the EcoWatch DCP program. Click on **Comm**, then choose **Sonde** from the pull-down menu. Verify the COM port selection and click **OK** to open a new window labeled Sonde - COM2.

At the # sign type in “**menu**”. When you press Enter, you will enter the main sonde menu. It will appear similar to the screen below. Any difference is related to the model of sonde you are using.

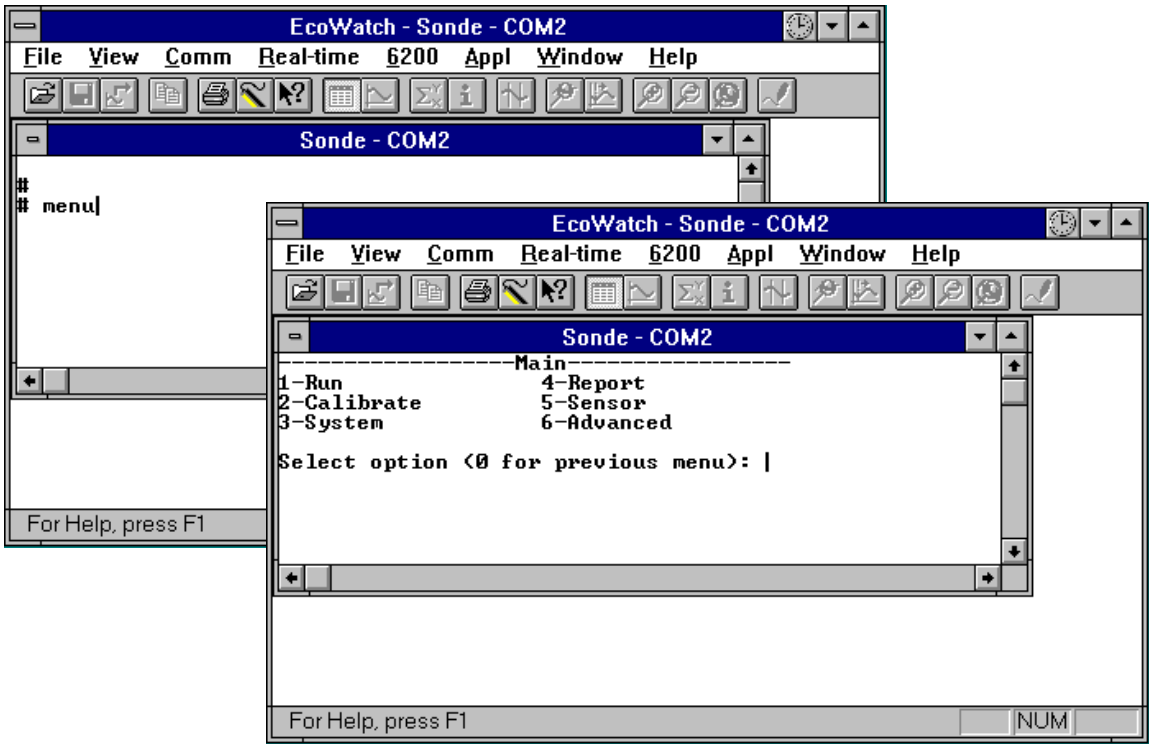

If you are unable to establish interaction with the sonde, make sure that the cable is properly connected, power is applied (e.g., 6038 Power Supply or other 12 VDC source), and that the COM port is set correctly. If you were unsure of your COM port number, reassign another port number and repeat the steps above.

3.4 Preparing the Sonde to Communicate with the 6200 DCP

The sonde software is menu-driven. Select a function by typing its corresponding number or character. It is not necessary to press Enter after a number/character selection. Use the 0 or Esc key to return to a previous menu. The mouse does not interact with the sonde menus.

Note: If a single keystroke yields no response on the screen, press the key again. You should now see a reaction. This occurs when a key is not pressed for a period of time sending the sonde into a “sleep mode”. The first press of the key “wakes” up the sonde and the second press activates the command.

In order to properly assign sensors and parameters for the sonde, follow the step-by-step instructions below. The illustrations and numbers may differ some from your screens, since sonde menus vary somewhat from model to model.

To communicate with the 6200 DCP the sonde needs to have these three items setup properly:

1. Communication at 9600 baud with Auto baud
2. A unique SDI-12 address
3. The SDI-12 autosleep function on

From Main menu press **3**-System, then **1**-Comm setup.

1-Comm setup allows you to confirm the baud rate at **9600**, which is the default value. You should also confirm that the Auto baud has a (*****). This assures that the sonde will work properly with a 610. Press **0** to return to the previous menu System setup.

4-SDI-12 address of the sonde is 0 by default. You may assign any character between 0 - 9 and A - F to provide a specific address for your sonde. This is of particular importance in multi-sonde applications involving the 6200 DAS. If you are deploying multiple sondes then they each must have a unique address. Usually, you would start with 0, then make the next sonde 1, then the next sonde 2… and so on. Up to 16 sondes can be connected to one 6200 DCP. Press **0** to return to previous menus until you return to Main.

```
----------------Main----------------
1-Run                4-Report
2-Calibrate          5-Sensor
3-System             6-Advanced

Select Opt
```

```
-----------System-setup----------------
1-Comm setup
2-Page length=25
3-Instrument ID
4-SDI-12 address=0

Select Option (0 for
```

```
--------------Comm-setup--------------
1-(*)Auto baud       5-( )2400 baud
2-( )300 baud        6-( )4800 baud
3-( )600 baud        7-(*)9600 baud
4-( )1200 baud

Select Option (0 for previous menu):
```

From Main menu press **6**-Advanced, then **2**-Setup. Verify that the screens below matches what you see. It is very important that the Auto sleep options are activated, especially when the sonde is being set up for deployment. For more details see your sonde manual.

```
----------------Advanced---------------
1-Cal Constants     3-Sensor
2-Setup             4-Data

Select Option (0 for prev
```

```
-------------Advanced setup------------
1-(*)VT emulation
2-( )Power up to Menu
3-( )Power up to Run
4-( )Comma Radix
5-(*)Auto sleep RS232
6-(*)Auto sleep SDI12
7-( )Multi SDI12

Select Option (0 for previous menu):
```

Now press **0** twice to return to the Main menu.

3.5 Installing and Calibrating Sonde Sensors

You are now ready to calibrate your 6-Series Sonde. Refer to the calibration and setup sections in your users manual that comes with your sonde.

General Calibration Tips

Your YSI 6-Series Sonde will provide accurate sensor readings when used with the 6200 DAS only if it is calibrated properly! Thus, a complete understanding of the procedures is required. The calibration of the sensors is not difficult, but does require proper attention to detail. The key is to follow the recommended procedures in general and, more specifically, to take your time during calibrations. Remember that the sonde will be deployed for several weeks between recoveries for maintenance and, therefore, a few extra minutes during calibration is not significant in the overall timeframe of its use. After several deployments, you should be able to complete calibration of all sensors within 30 minutes, but it might take somewhat longer until you become familiar with the software prompts and the protocols. The extra time expended during initial calibration to “get it right” will be well worth the effort.

NOTE: The barometer reading from the 6200 DAS (if installed) is not corrected for sea level. You may use this value if the calibration constant was entered when the system was setup. Barometer readings which appear in meteorological reports are generally corrected to sea level. If you are not at sea level, you must “uncorrect” these readings before entering them in the calibration procedure.

Section 4
Powering the Field Station

4.1 Introduction

There are three options for powering the field station. All involve using a rechargeable lead acid battery (12 volt, 12 Amp Hour) that is mounted inside the 6200 DCP (field station).

One option is to use the battery as the sole source of power. A fully charged battery lasts from a few days to a few weeks, depending on the number and type of sensors and the mode and frequency of communication. The battery is easy to remove, requiring no tools. Low batteries may be recharged using a P/N 6254 Charger. One approach to powering would be to use two batteries and periodically swap out one for the other, recharging the low battery at the Lab or office.

A second option is to use AC power, which continuously recharges the battery. When you order the AC Power Option, a power module is installed in the interface plate inside the enclosure. The module contains a 3-prong male receptacle, voltage selector and fuse compartment. A power cable (provided) plugs into the receptacle and is used in both setup and permanent installation procedures to provide AC power. Predrilled holes in the bottom of the NEMA enclosure are designed for use with standard conduit fittings. Cabling may be routed through ½" conduit to interface the charging circuit with the AC power source.

A third option is to use a solar panel (10 watt rating) with the field station. This unit is designed for use in a nominal 12 VDC system. The 6200 DCP uses the solar energy to power the board and recharge the battery for continuous operation. A dedicated 2-conductor receptacle and plug are installed inside the NEMA enclosure for easy access to connect the solar cable to the 6200 DCP. Cabling may be routed through conduit or a feed-through gland to interface the power circuit with the solar panels.

4.2 General Wiring Information

WARNING!
Wiring should be performed by a qualified electrician.
Do not make connections while power is applied. Disconnect power before proceeding.

This part of the installation of the 6200 DCP will vary considerably depending on the installation setup you have chosen. Refer to Appendix E if you have not determined your installation setup. Refer to sections below for specific power options and read thoroughly all general wiring instructions before proceeding with the installation.

Connections and Routing...

All of the standard sensors (water quality and meteorological) have pre-wired waterproof connectors on the bottom of the 6200 DCP. See Figure 4.1 to locate specific connector sites. In addition, there are two holes (0.875 in or 22 mm) in the bottom of the enclosure for use with conduit fittings or feed-through glands. These holes are plugged with NEMA 4X rated seals. One of the two holes should be used for power lines in the options involving AC or solar power. The second hole may be used for a phone line, direct serial cable, or for non-standard sensors that must be wired to the expansion terminal block inside the enclosure. We do not recommend that you route power cables and sensor cables through the same conduit hole.

Grounding...

Although there are several options related to powering your 6200 DCP field station, you should properly ground the 6200 DCP. Refer to Figure 4.1 to locate the earth ground connector. We recommend #6 standard copper wire connected to a 6' grounding rod to earth ground your DCP, however refer to your local wiring codes to insure proper grounding installation.

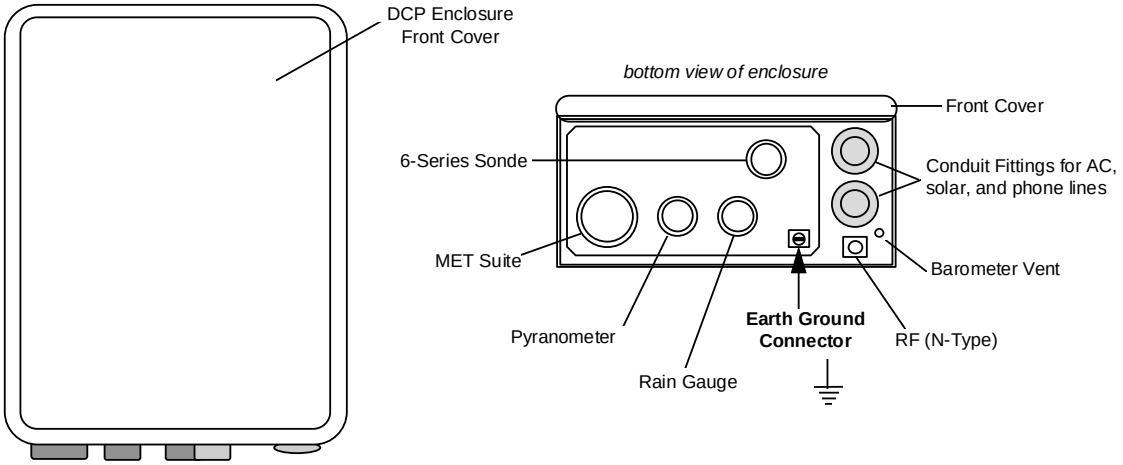

Figure 4.1 6200 DCP, Bottom View

In addition to the ground connector, notice the four MS waterproof connectors for the sensors, including the 6-Series Sonde connector. If you are installing sondes at your field station, note that the sondes are powered by the 6200 DCP and are operated with a "floating" ground. This requires that the sonde <u>not</u> be individually grounded. Grounding the sonde individually will cause a "ground loop", i.e., one conductor of the sonde output grounded common to both the sonde and the DCP circuitry. Grounding the sonde will cause significant performance problems with the sensors and will likely result in erroneous readings.

CAUTION!
Do not ground the sonde body.

Lightning and Surge Protection...

The standard 6200 DCP has full isolation and lightning protection on all external connections and standard internals such as telephone connection, DB-9 serial communications port and the solar charger. You may purchase a factory-installed option that provides full isolation and lightning protection on the expansion terminal block, which is not provided on the standard unit. See Appendix D, Accessories. To insure maximum protection route grounding wire from the 6200 DCP to the grounding rod by the shortest possible distance.

For additional protection you should install a surge protection device on any AC line supplying power to the 6200 DCP. AC line voltage suppressers protect field equipment on any AC line from damage due to electrical transients induced in the interconnecting power lines, from lightning discharges, and other high voltage surges. The unit should include noise filtering, common mode and normal mode suppression, and nanosecond reaction time. Surge suppressers should be internally fused to remove the load if the unit is overloaded or the internal protection fails.

Lightning protection devices should be located as close to the 6200 DCP as possible and wired in accordance with local codes in approved watertight enclosures.

NOTE
This or any other installation procedure can not protect against a direct lightning strike. YSI can not accept liability for damage due to lightning or secondary surges.

Safety Issues...

To avoid possible electrical shock, do not attempt to access any of the components behind the front panel inside the 6200 DCP enclosure. Disconnect external power to the unit before connecting or disconnecting wiring to any of the connectors located inside the DCP enclosure.

WARNING!
Turn off all power and assure power “lockout” before servicing to avoid contact with electrically powered circuits.

4.3 Installing the Battery

This section describes the procedure for powering a 6200 DCP that will operate in the field on battery power only. As described in Section 2, the battery is shipped in a separate carton and therefore must be installed into the 6200 DCP enclosure. No tools are required to install the battery.

CAUTION!
Before installing the battery read all instructions and safety information included with the battery including any safety labels attached to the battery or its carton.

CAUTION!
If you have a unit with a 2-way radio, connect the antenna to the RF connector on the bottom of the enclosure before powering the 6200 DCP. This will avoid possible permanent damage to the radio transceiver.

Slide the battery into the open area (shown in Figure 4.2). The battery leads should be visible from a grommet in the interface plate. Connect the red lead to the positive terminal by sliding the tab connector over the battery tab. Connect the blue lead to the negative terminal in the same way. Your 6200 DCP is now powered. It will beep for about 5 seconds during boot up.

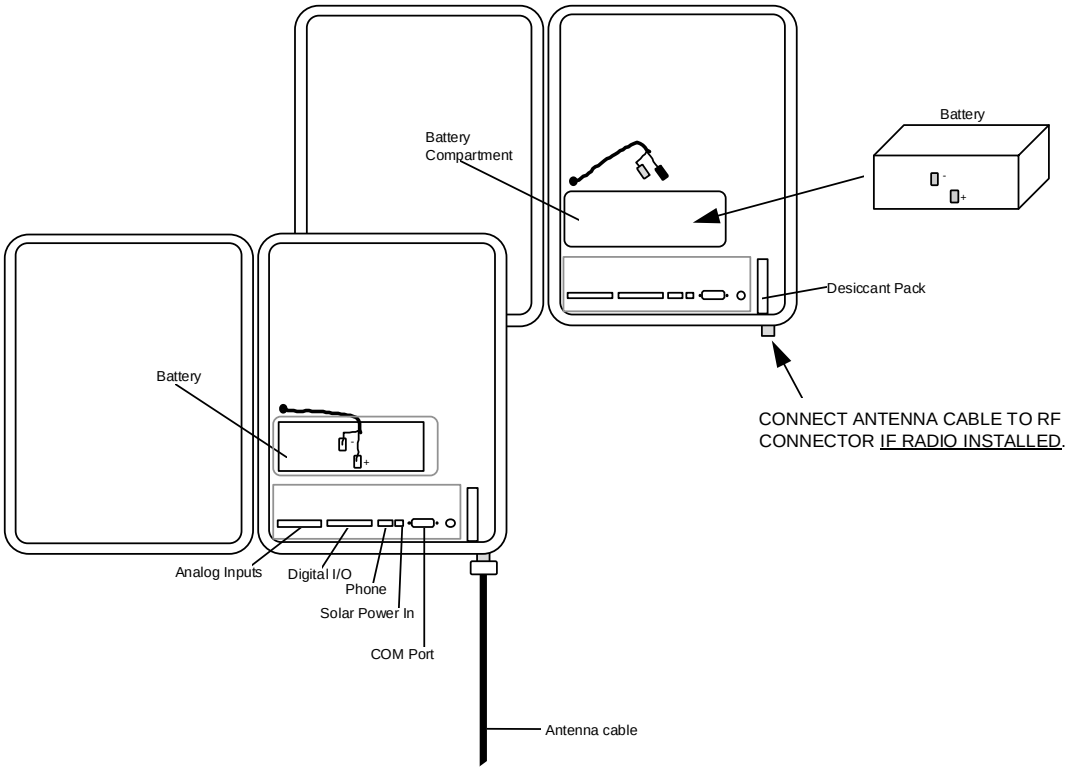

Figure 4.2 Installing the Battery

4.4 Installing AC Power to the Field Station

WARNING!
Wiring should be performed only by a qualified electrician.
Do not make connections while AC main power is applied.

CAUTION!
If you have a unit with a 2-way radio, connect the antenna to the RF connector on the bottom of the enclosure before powering the 6200 DCP. This will avoid possible permanent damage to the radio transceiver.

The 6200 DCP has a switchable power supply that can operate on 100 to 240 V~, 50/60 Hz power. The power setting that you require must be verified and set, if necessary. The default power setting is 120 V~. If you need to change the voltage setting refer to Figure 4.3 and do the following. Use a small blade screwdriver to pry open the fuse cover from the top. Remove the voltage selector drum, rotate it so the desired setting will show through the window in the cover, then replace the drum. If you need to change the fuse, be sure that it is installed in the right side. Snap the cover back into place and proceed with the AC power installation.

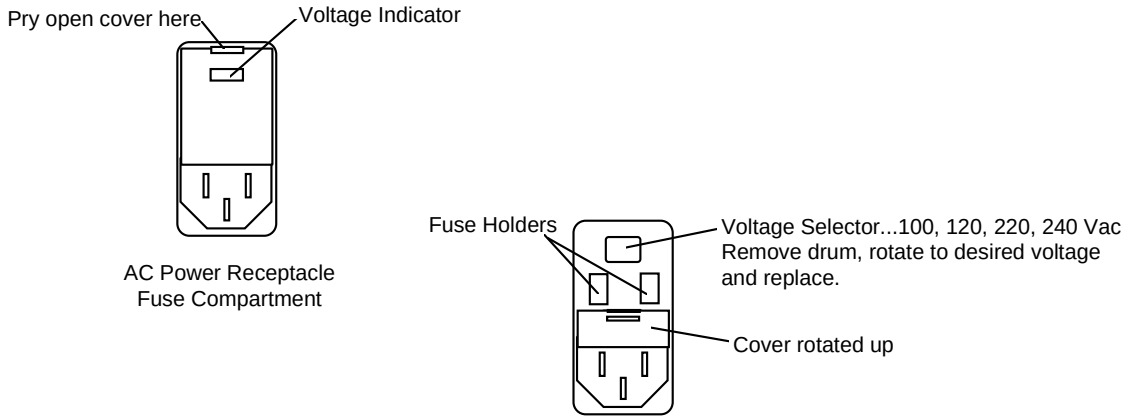

Figure 4.3 AC Power Module, Setting the Voltage

The 8ft (2.4 m) power cord provided with the 6200 can be used to check out the system in the laboratory or other suitable location, and then later cut and spliced into AC power for permanent installation. The power cord has a 3-prong standard plug for 120 V~ receptacles. If this plug is not suitable for your facility, you will need to provide an equivalent cord or cut and splice the power cable for the checkout setup. Refer to Figure 4.4 for illustrations.

A battery comes with every 6200 DCP. The AC power option is designed so that the battery is continually charged while AC power is available. If AC power should fail, the battery serves as a backup.

Installation and connection of the battery is described above in Section 4.3. For now you may place the battery in the battery compartment. You may want to leave the battery terminals unconnected

until the AC power installation is complete. If you connect the battery, and it is adequately charged, the 6200 DCP will begin logging data to memory based on it's last settings.

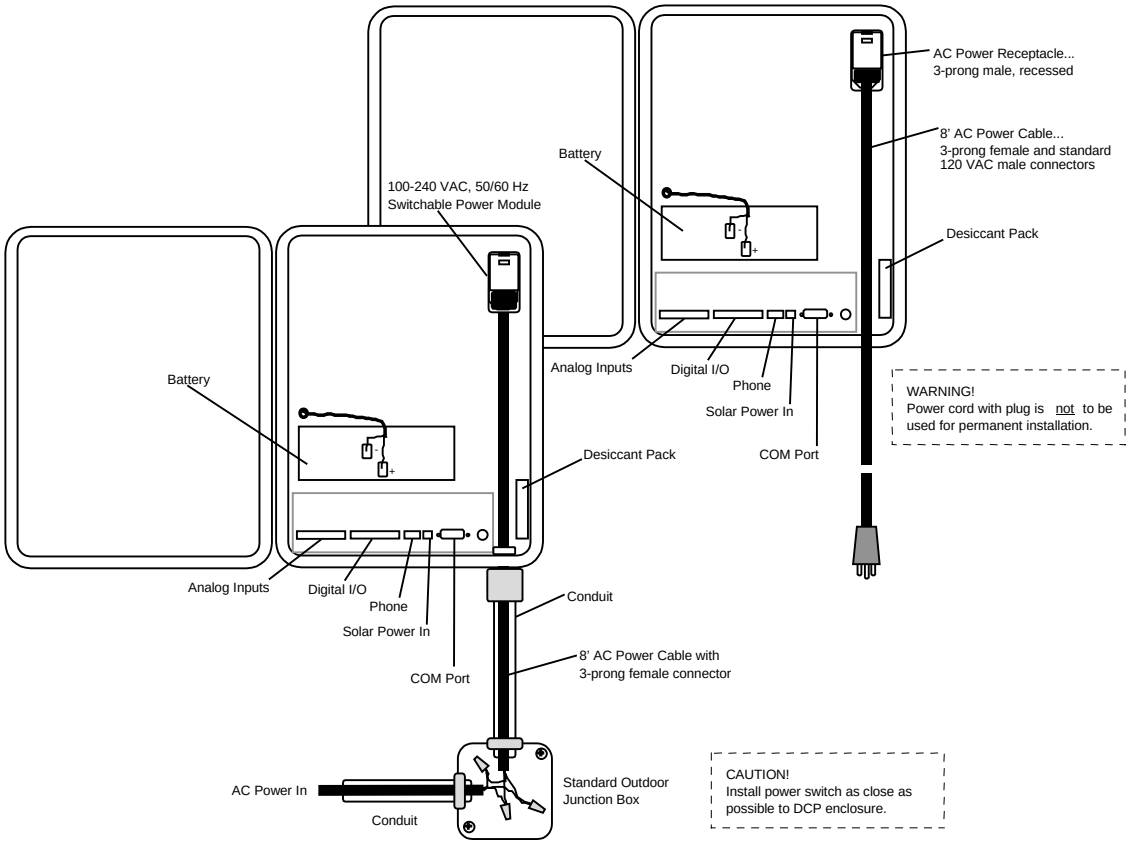

Figure 4.4 AC Powering of 6200 DCP

To meet compliance with UL3010, EN61010 and CSA 1010, install a power switch on the AC load line external to the 6200 DCP enclosure. We recommend that you install the switch near the 6200 DCP enclosure (see junction box in Figure 4.4) and choose a suitable switch that can be locked. (Note: AC on/off power switch and junction box is not included with the 6200 system.) Check local electrical codes for proper installation.

Use the following precautions from UL 508 as a guide to safety for personnel and property.

1. AC connections and grounding must be in compliance with UL 508 and/or local electrical codes.
2. This type 4/4X enclosure requires a conduit hub or equivalent that provides watertight connection, REF UL 508-26.10.
3. Watertight fittings/hubs must comply with the requirements of UL 514B.

Conduit hubs are to be connected to the conduit before the hub is connected to the enclosure, REF UL 508.26.10.

The electrical system must be grounded to avoid possible electrical shock or damage to the equipment. See Section 4.2 which contains information related to grounding, routing wires and lightning and surge protection.

WARNING!
Turn off all power and assure power "lockout" before servicing to avoid contact with electrically powered circuits.

Once you have installed AC power to the 6200 DCP, connect the battery leads as described in Section 4.3. When the power is applied the field station will beep for about 5 seconds during boot up. Your system is now AC-connected for continuous charging of the battery. In case of AC power failure, the battery provides power for many days in typical monitoring applications.

4.5 Installing Solar Power to the Field Station

This section describes the procedure for powering a 6200 DCP that will operate in the field using solar powered battery charging in combination with a lead acid battery. The solar unit provides power to charge the 12 VDC, 12 Ah battery. YSI offers P/N 6241 Solar Power Supply, designed for use in 12 VDC systems and rated at 10 watts peak power. A 30 ft (10 m) cable with a 2 pin connector is provided with the Solar Power System. The battery is provided with all 6200s and installation has been described in Section 4.3.

CAUTION!
Before attempting to install the solar panel read all instructions and safety information included with the solar unit including any safety labels attached to the panels or to its packing carton.

CAUTION!
If you have a unit with a 2-way radio, connect the antenna to the RF connector on the bottom of the enclosure before powering the 6200 DCP. This will avoid possible permanent damage to the radio transceiver.

The solar power cable should be routed to the bottom of the 6200 DCP enclosure. Use either a feed-through gland or conduit fitting (if conduit is used to route the cable) to get the solar power cable inside the enclosure. Use a small blade screwdriver to connect the red wire to the positive side and the black wire to the negative side (see figure 4.5).

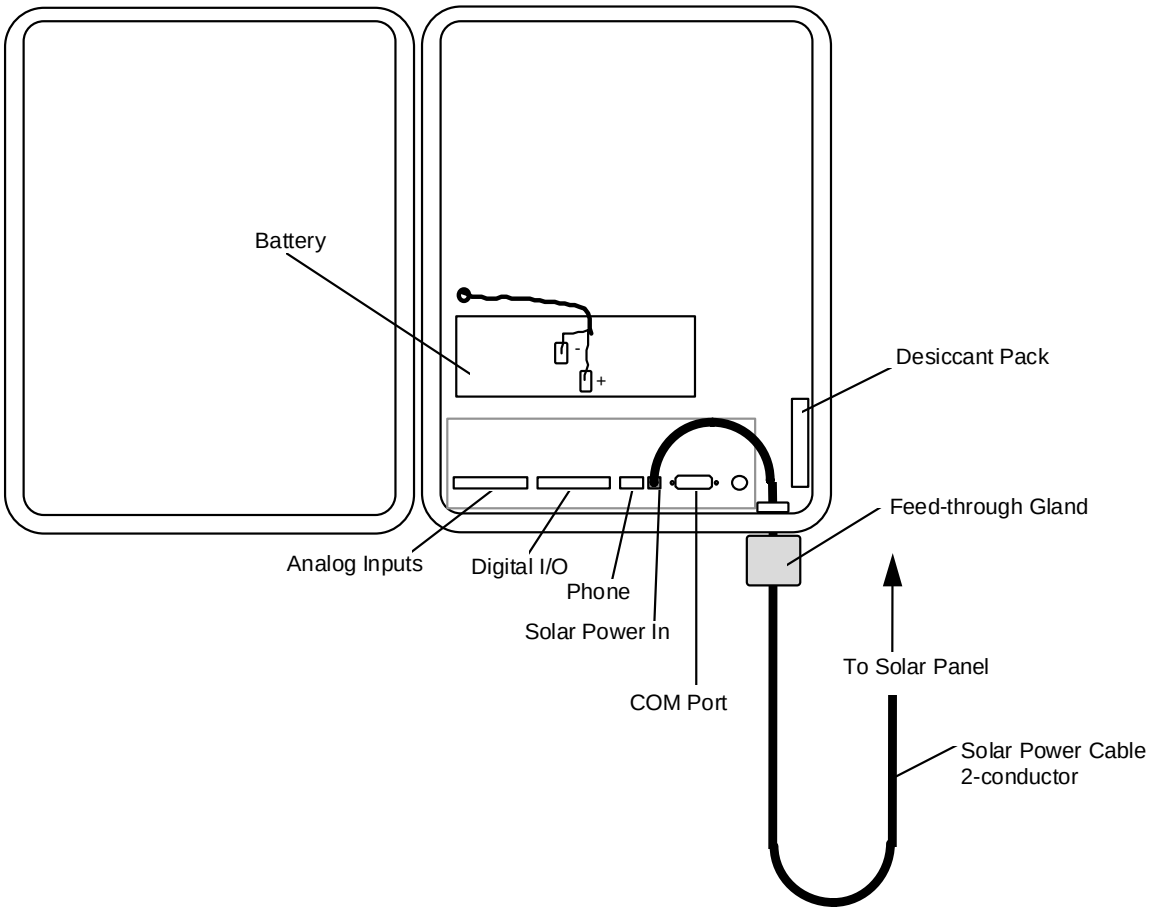

Figure 4.5 Solar Power Supply Connections

Once you have installed solar power to the 6200 DCP, connect the battery leads as described in Section 4.3. The field station should beep for about 5 seconds during boot up. Your system is now solar power-connected for continuous charging of the battery when environmental light is present. If the solar panel fails for any reason, the battery will provide power for a few days or weeks, depending on the state of the charge when solar power failed, the number of sensors and the frequency of data logging.

Section 5
Connecting Sensors to the Field Station

5.1 Introduction

There are five standard sensor packages that may be ordered for use with the 6200 DAS. If you performed the checkout setup described in Section 2, you should be familiar with these sensors. The barometer is factory installed. The other four sensors are connected to the 6200 DCP enclosure using weatherproof MS-style connectors that plug into the bottom of the enclosure and are secured by a threaded nut. Be careful not to cross-thread the retaining nut. Use your fingers to tighten the nut. Do not use tools to tighten. Refer to the list below for general reference and to Figure 5.1 to determine the location of each sensor input connector. If you are not installing one of the sensors below, be certain to leave the waterproof cap in place and securely attached.

- Meteorological (MET) Suite (wind speed and direction, RH and air temperature)
- Pyranometer (solar radiation sensor)
- Rain Gauge (tipping bucket design)
- Sonde (multiparameter water quality, including temp, DO, conductivity, pH and more)
- Barometer (installed within the 6200 DCP at the factory, no connector required)

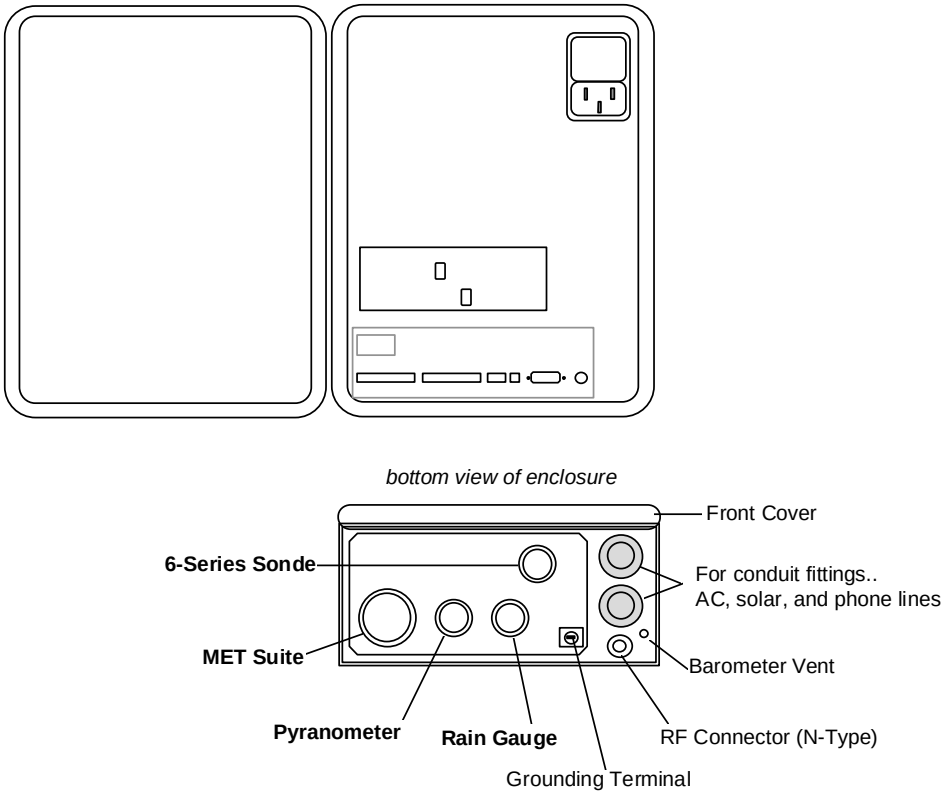

Figure 5.1 6200 DCP External Connectors for Sensor Inputs

If you followed the procedure recommended in Section 2, you have checked your entire 6200 system in the laboratory and verified that it is functional. In performing this checkout you probably connected all of your sensors to the 6200 DCP. This section describes how to permanently install these sensors at the field station site. There are many ways to mount the various components of the system, but these tend to be site specific. Refer to Appendix E for examples of installations.

IMPORTANT!
If you have an installed radio in your system, connect the antenna before you power the 6200 to avoid permanent damage to the radio transceiver.

By now you should have physically installed the 6200 DCP enclosure, the power lines or solar panels (if applicable) and any communication accessories (e.g. antenna). Connecting the sensor cables is very straight forward. All of the standard meteorological and sonde cables are prewired with MS style connectors and plug directly into MS receptacles mounted to the 6200 DCP enclosure. Refer to instructions below for connecting each sensor.

5.2 Connecting the MET Suite

If you repacked the MET Suite, remove the propeller from the carton and use the finger-nut attached to the main shaft to secure the propeller to the main assembly. The molded lettering on the propeller should face out or away from the main assembly. Hold the front cone and slightly rotate the propeller to insure that it drops into the “cross” shaped channel on the cone. Finally tighten the nut with your fingers. Do not use excessive force to tighten this component.

Mount the MET Suite to the permanent support on your mounting platform. Use a compass to verify that the “arrow” on the MET Suite points due north. Correct for magnetic north if necessary for your particular study. See Figure 2.1 for reference. Also refer to the MET Suite manual that comes with this sensor. The sensor manuals are located the end of this manual.

Tighten the screw-on connector of the MET Suite to the 6200 DCP with your fingers. Do not use tools to tighten this connector.

5.3 Connecting the Rain Gauge

If you repacked the Rain Gauge, remove it from the packing carton. There is no assembly required. If you have not determined how you will mount the rain gauge, refer to Appendix E and your rain gauge manual for possible mounting configurations. The sensor manuals are located the end of this manual. Remember, if you have the heated rain gauge (P/N 6216) you will need to provide AC power separately to the rain gauge unit. A qualified electrician should perform the wiring and should not make connections while power is applied.

The rain gauge should be level. The standard model contains a bubble level inside and 3 adjustment screws for leveling the gauge. Remove the cap/funnel assembly to view the tipping buckets and the bubble level. Be sure that the tipping bucket moves freely. Adjust appropriately and reattach the cap assembly.

Tighten the screw-on connector of the rain gauge to the 6200 DCP with your fingers. Do not use tools to tighten this connector.

5.4 Connecting the Pyranometer

If you repacked the pyranometer, remove it from its packing carton. The solar detector is mounted to an aluminum base with a bubble level. Secure it to an appropriate support structure. Refer to Appendix E and your pyranometer manual for possible mounting configurations. The sensor manuals are located the end of this manual. An optional mounting arm and bracket (P/N 6253) is available if needed. Mount and level your pyranometer assembly. The pyranometer needs to have a clear view of the sun and sky. Mount it on the south side or away from other devices to avoid shadows.

The pyranometer is supplied with a 10 ft (3 m) cable terminating in a MS-5 pin connector. Simply insert the connector into the receptacle. You may need to rotate it slightly to allow the index key to slide into place. Next tighten the screw-on connector retainer with your fingers. Do not use tools to tighten this connector. Remove the plastic cap that protects the light sensing surface.

Once connected and communicating, you will be prompted to enter a solar radiation calibration constant (provided) during EcoWatch DCP System setup.

5.5 Connecting One Sonde

Remove the 6-series sonde from its packing carton. There are several models of sondes that can be used with the 6200 DCP. Refer to the sonde manual for proper initial setup, which includes installation of sensors and initial calibration. Refer to Section 2.4 in this manual for a basic checkout setup. More information for setup and calibration of the sonde is located in Section 3.

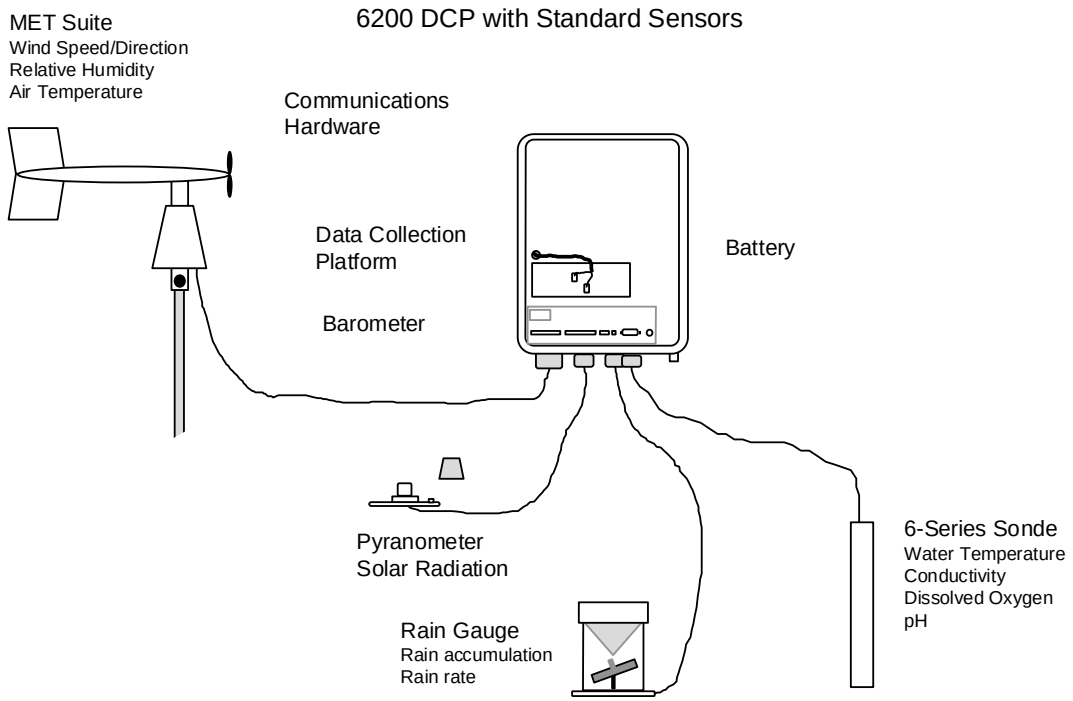

Figure 5.2 Connecting Sensors to the 6200 DCP

5.6 Connecting more than One Sonde to a Field Station

Some applications may require more than one sonde to be connected to a single field station. In order to communicate with multiple sondes, they each must be assigned unique SDI-12 addresses. The default address in a new sonde is 0, but you may assign any one digit address from 0 to F (0 to 9 and A to F) for a total of 16 different sondes connecting to a 6200 DCP. Refer to section 3.4 for changing the SDI-12 address.

Since there is only one MS-8 Sonde connector at the 6200 DCP, some combination of breakout and junction boxes will be necessary for multiple sonde configuration. A 6 ft (2 m) patch cable (P/N 6507) terminates in an MS-8 at one end and “flying leads” at the other. There are three configurations that describe the basis for all configurations. See the descriptions and figures below that describe these SDI-12 multi-sonde connections.

IMPORTANT!
Corrosion can cause significant performance problems if moisture intrusion is not controlled. Make certain that all junction boxes are tightly sealed and that desiccant is used in all boxes. Always use fresh desiccant when you open and close the 6200 DCP enclosure or any junction box.

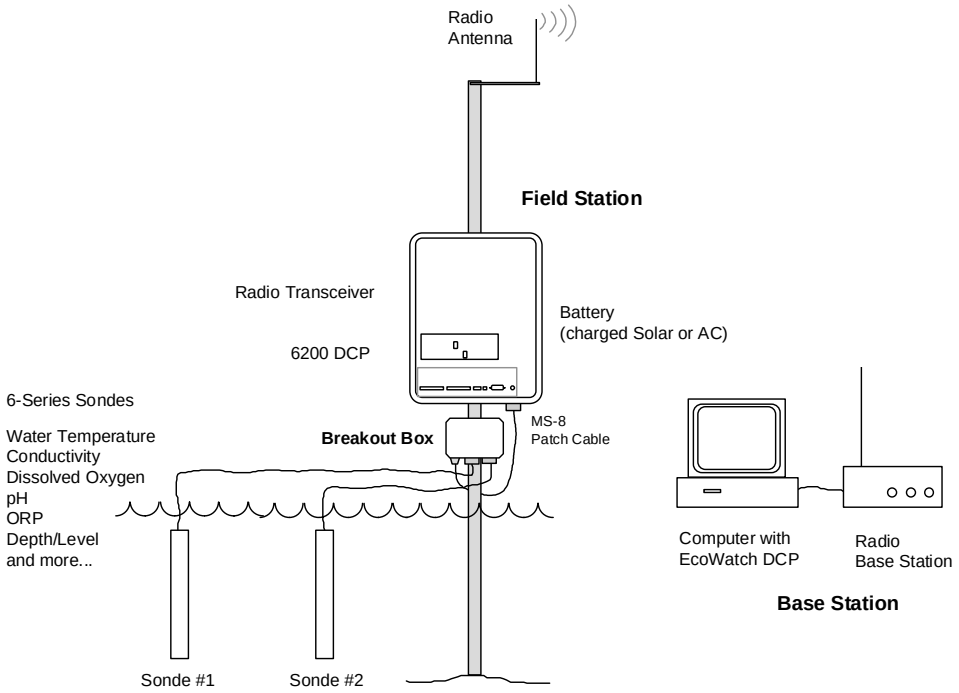

Figure 5.3 2-Sonde Connection Near to the 6200 DCP

Two Sondes Deployed Near the 6200 DCP

If two sondes are required and are near to the 6200 DCP installation, then the 6504 Breakout Box with a 6507 Patch Cable provide all you need to connect these sondes. The breakout box must be mounted within 6 ft (2 m) of the 6200 DCP and the sondes close enough that their cables can reach the breakout box. Standard cables can be ordered up to 200 ft. (60 m). The breakout box has two MS-8 connectors for weatherproof connections. The patch cable is connected to the breakout box using a feed-through gland. The “flying leads” attach to the terminal connector provided with the breakout box. Refer to Figure 5.5 for the SDI-12 pin out.

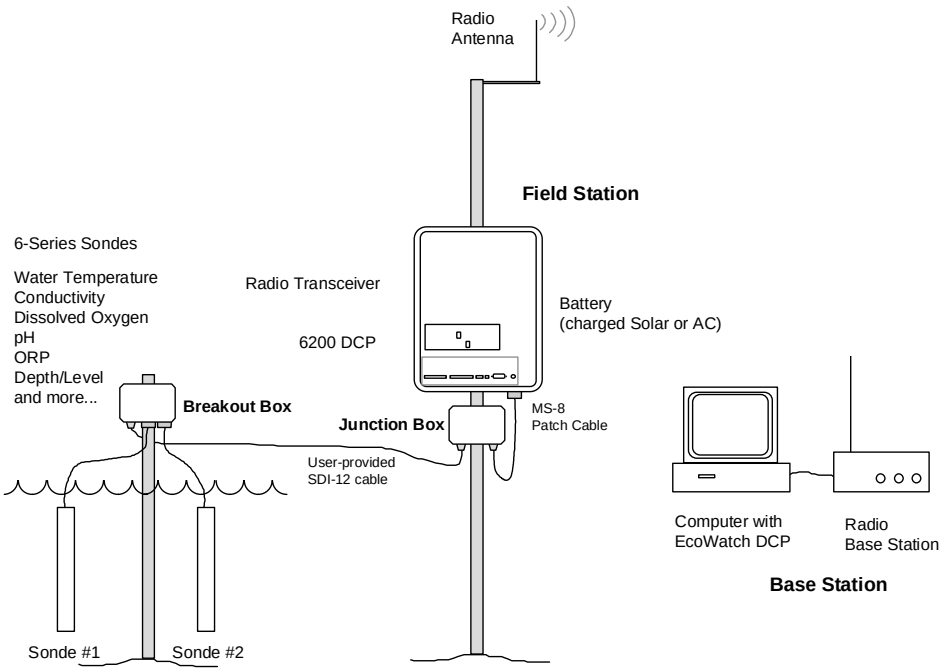

Figure 5.4 2-Sonde Connection Remote to the 6200 DCP

Two Sondes Deployed Distant to the 6200 DCP

If two sondes are required and are both some distance from the 6200 DCP installation (e.g., more than 200 ft. (60 m), then the 6502 Breakout Box combined with a 6508 Junction Box and a 6507 Patch Cable provide most of what you need to link the sondes with the 6200 DCP. The breakout box is mounted where the sondes are deployed. The junction box is mounted right near the 6200 DCP and a user provided cable connects the two boxes. The patch cable connects the junction box to the 6200 DCP. A maximum of 250 ft. (75 m) is recommended between the farthest sonde and 6200 DCP. See Figure 5.4 for an illustration of this configuration.

The 6508 Junction Box is basically an empty box with a cover and three holes available for feed-through glands or conduit fittings. Using wire nuts or terminal strips, you can splice the SDI-12 cable from the Breakout Box to the Patch Cable that connects to the 6200 DCP. See the wiring diagrams below which identify the pin outs and cable color information needed to make these connections.

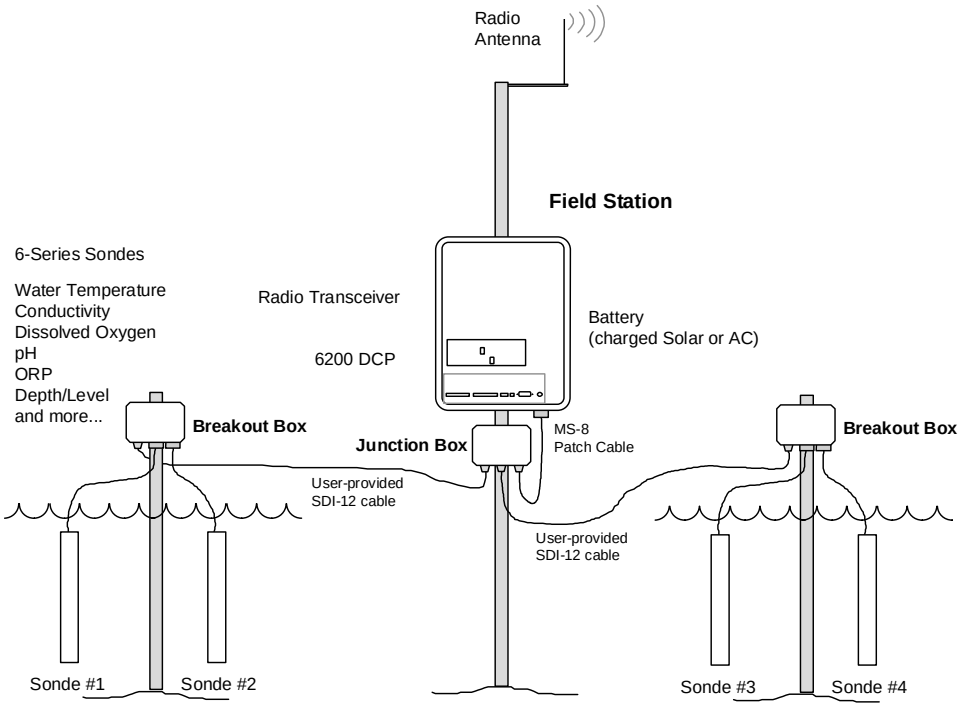

Figure 5.5 4-Sonde Connection Remote to the 6200 DCP

Four Sondes Deployed Distant to the 6200 DCP

If more than two sondes are required and are remote to the 6200 DCP installation, you will need two 6502 Breakout Boxes, a 6507 Patch Cable, and a 6508 Junction Box. The breakout boxes should be mounted near the deployed sondes. The junction box is mounted near the 6200 DCP, and user supplied cable connects the two breakout boxes to the junction box. The patch cable connects the junction box to the 6200 DCP. A maximum of 250 ft. (75 m) is recommended between the farthest sonde and 6200 DCP. See Figure 5.5 for an illustration.

Note that there are 4 different sonde addresses assigned in this connection scenario. SDI-12 addresses 1, 2, 3, and 4 would be logical, but any unique addresses will work. The wiring parallels what is described in the previous description and the pin out and color designations in Figure 5.7 are appropriate for the wiring. You can see from this diagram that to go beyond 4 sondes you will need an additional junction boxes and breakout boxes.

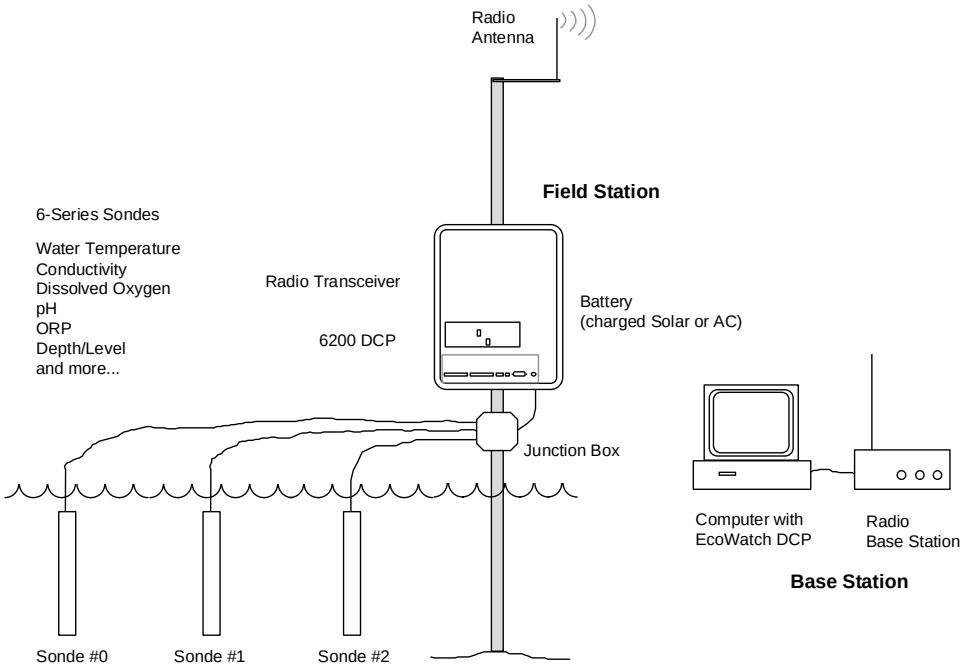

Figure 5.6 Multi-Sonde Connection to 6200 DCP with Standard Junction Box

Multiple Sondes Deployed using a Standard Junction Box

If more than one sonde is required in the 6200 DCP installation, you may use a standard junction box located near the 6200 DCP and splice permanently-installed cables within this box. There are disadvantages to this configuration in that you can not use sondes with integral cables since the MS-8 connectors would be discarded to make the connection in the junction box. Sondes with bulkhead connectors are more expensive, but the convenience of the installation as shown in Figure 5.6 may outweigh the additional expense.

6504 Breakout Box

The 6504 Breakout Box is designed to convert one cable with SDI-12 information to two MS-8 Sonde connectors. This box works well with the 6507 Patch Cable. You will need a waterproof gland to fit on this cable. Feed the patch cable through this gland fitting and wire into the TB-1 terminal.

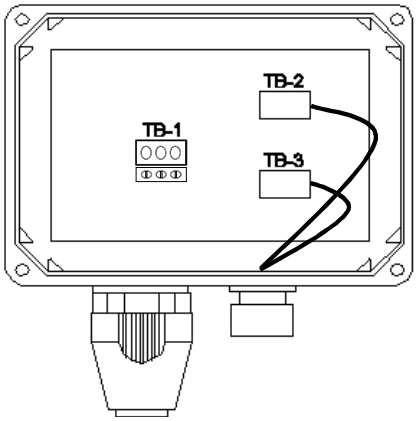

Wiring Diagram

(1) Red	+12 VDC
(2) Black	Common
(3) Purple or Blue	SDI-12

Figure 5.7 Standard Junction Box Connection, Pin Outs and Wire Colors

Junction Boxes

Junction Boxes are used whenever a cable connection is needed. The 6508 Junction Box has a terminal strip inside to help facilitate these connections, or they can be done with wire nuts. Always use some desiccant to be sure the connections remain dry.

The connection, including pin outs and wire colors are shown in Figure 5.8.

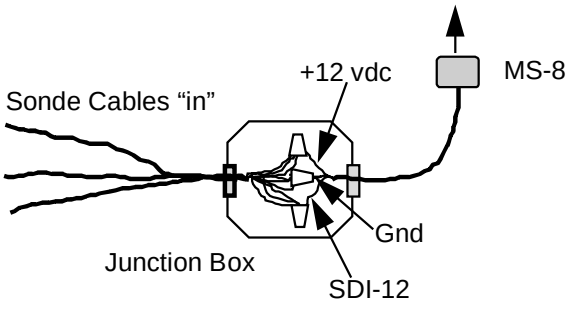

Wiring Diagram

(A) Red	+12 VDC
(B) Black	Common
(F) Purple or Blue	SDI-12

Figure 5.8 Standard Junction Box Connection, Pin Outs and Wire Colors

6507 Patch Cable

The 6507 Patch Cable is used to connect from the MS-8 on the 6200 DCP to a Junction Box or Breakout Box. This cable is 6 ft. (1.8 m) long and has a MS-8 on one end and flying leads on the other. The pin outs are shown below in Figure 5.9.

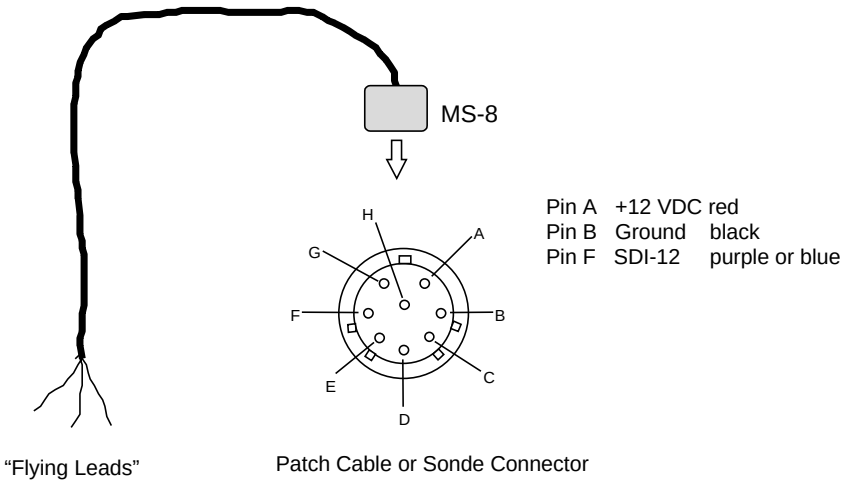

Figure 5.9 6507 Patch Cable Pin Outs and Wire Colors

Section 6
Communicating with the Field Station

6.1 Introduction

There are four options for communication between the field station and the base station. The field station is the 6200 DCP which logs data from the installed sensors. The base station is the lab or office with a computer loaded with EcoWatch DCP. Choosing the appropriate mode of communication depends on the relative distance between the field and base stations, and the available utilities such as phone and electrical lines and/or your personal preferences. The four communication options are:

- Direct Communication (RS232 serial communication via cable)
- Two-way Radio Communication (line of site; standard 2 watt radio requires no license)
- Telephone Modem
- Cellular Modem

Figures 6.1 through 6.4 illustrate the four basic options.

WARNING!
A qualified technician should perform wiring.
Do not make connections while power is applied.

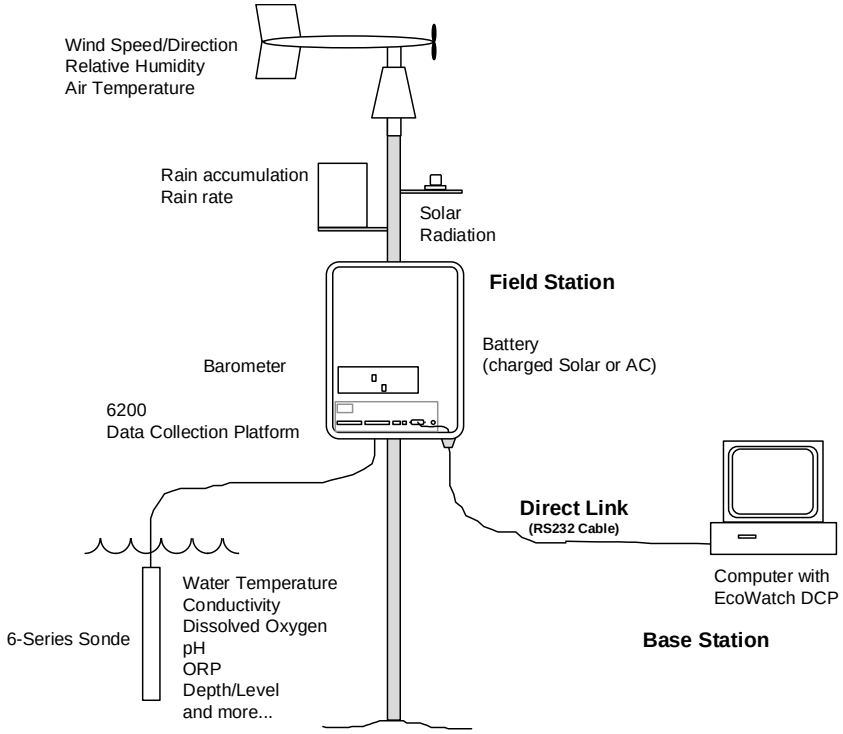

Figure 6.1 Direct Link (RS232) Between 6200 DCP and Base Station Computer

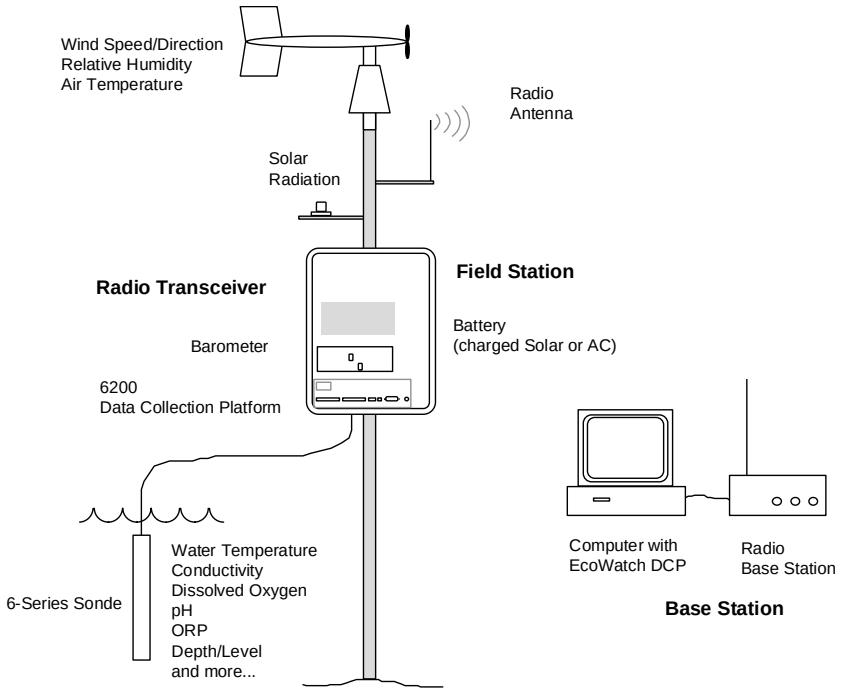

Figure 6.2 Two-way Radio Link Between 6200 DCP and Base Station Computer

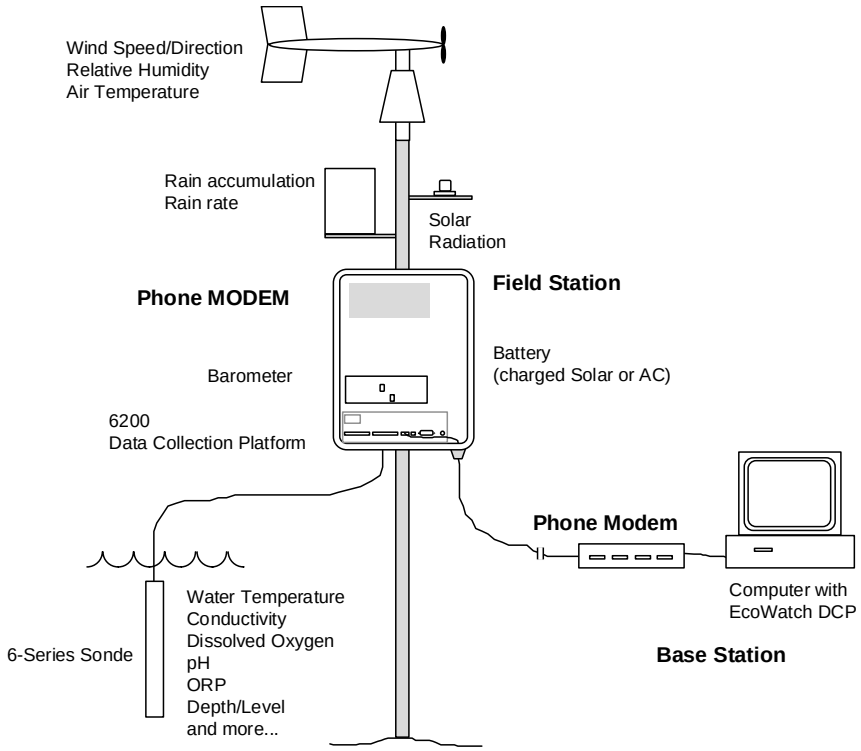

Figure 6.3 Phone Modem Link Between 6200 DCP and Base Station Computer

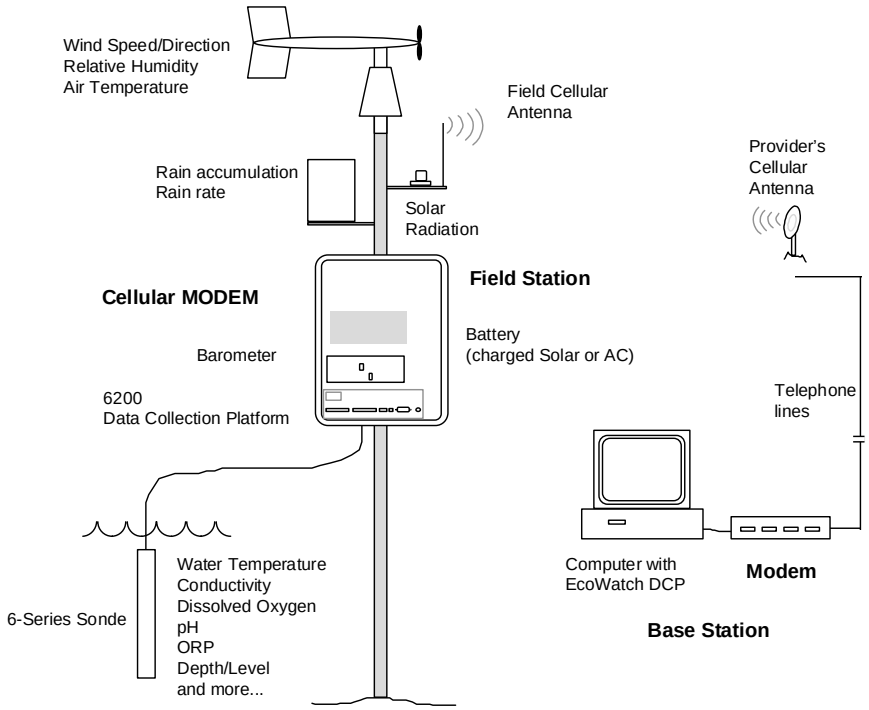

Figure 6.4 Cellular Modem Link Between 6200 DCP and Base Station Computer

Although you would typically use one mode of communication between a single field station and a single base station, you are not limited to a single mode of communication. If you plan to use a single base station to interrogate more than one field station, you can also set up a variety of communication modes. See the illustration below (Figure 6.5).

For example, if you have a nearby field station, you may be able to use a direct serial interface (cable connection). If a second field station is remote but near telephone utilities, you may choose telephone modem. For a third station that is remote and not near utilities, you may choose either cellular modem or 2-way radio. Distance and terrain may limit two-way radio. While cellular modem is more tolerant of distance and terrain, power drain at the field station and general operating costs may be restrictive.

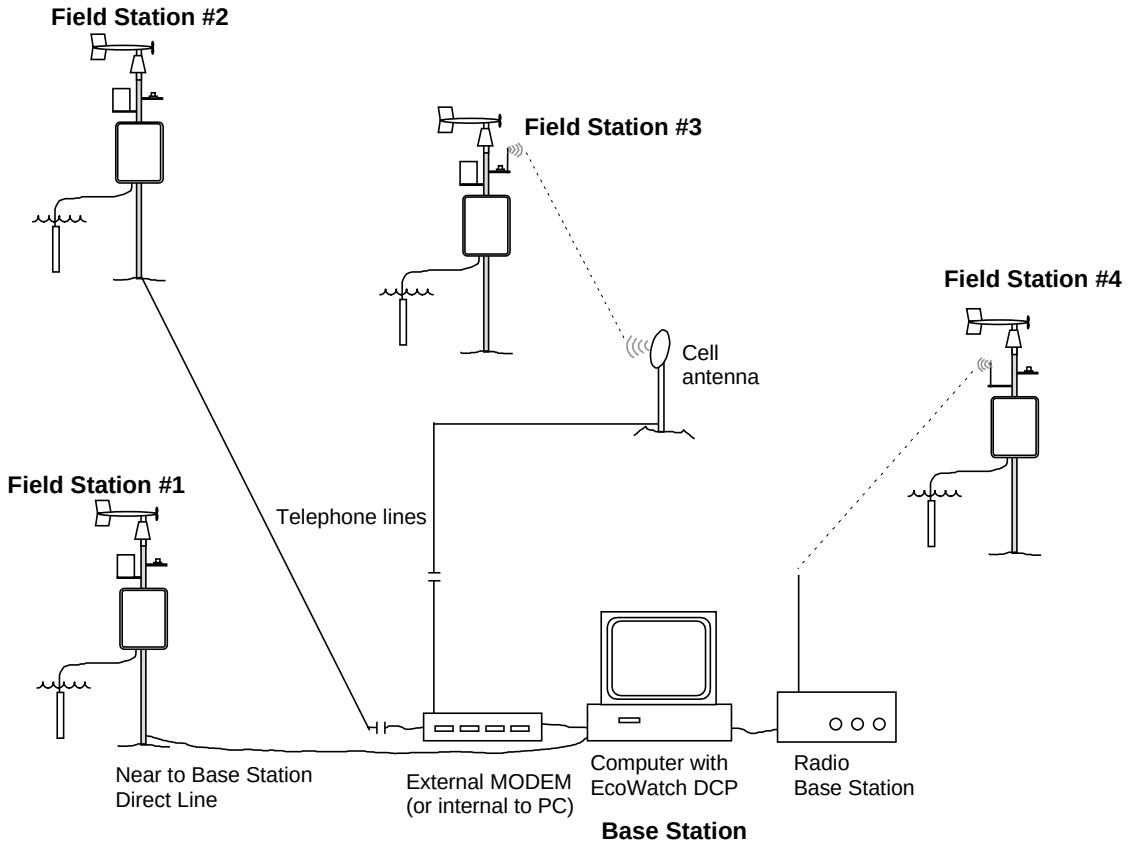

Figure 6.5 Multiple Field Station Setup
Variety of Comm Links Between 6200 DCPs and Base Station Computer

While the multiple communications mode shown in Figure 6.5 is one option, you may choose to use a single mode of communication for a multiple field stations. For example, if all of your field stations are within a few miles, and the terrain is flat, you may choose two-way radio communication.

Each 6200 DCP is identified by a unique identification number. You can interrogate more than one field station using the same base station radio/modem. This applies to all communication options, so that you have a great deal of flexibility in setting up sites and communication modes. See Figure 6.6 for an illustration of a single base station using one base station radio with multiple field stations.

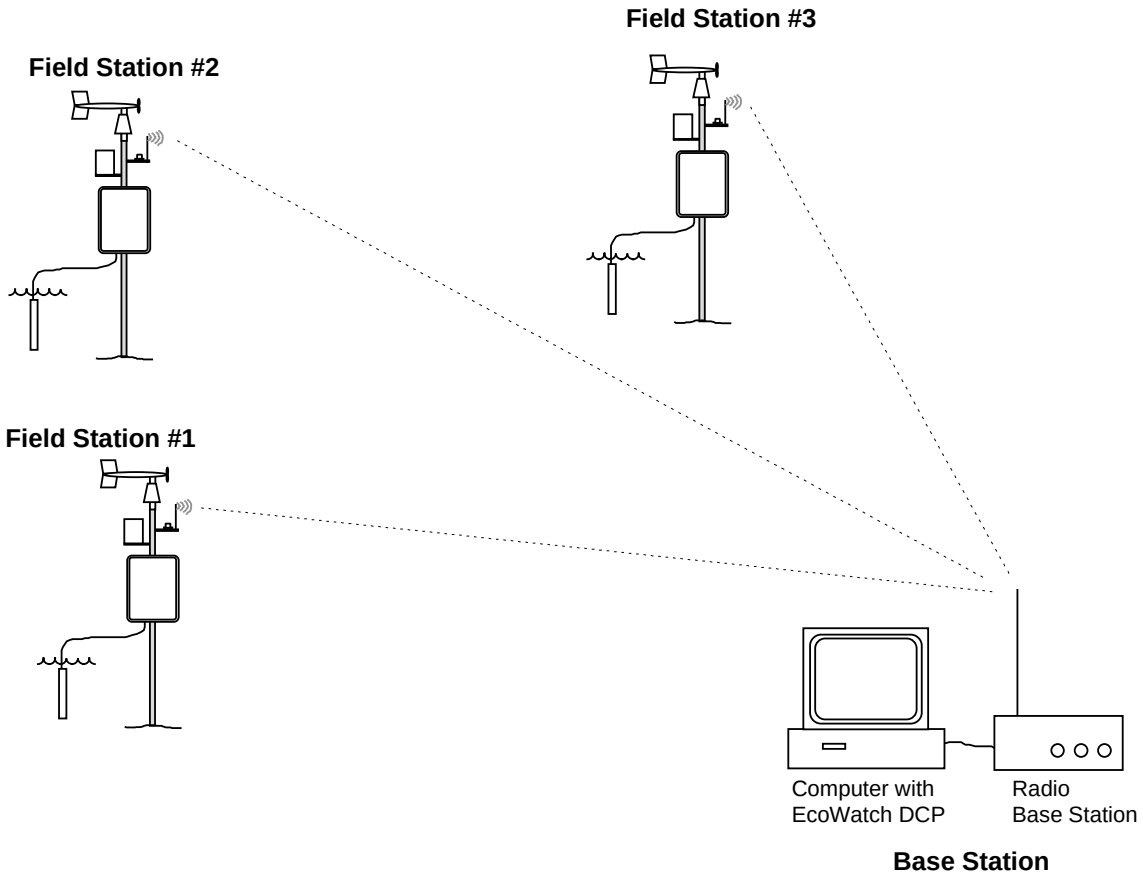

Figure 6.6 Multiple Field Station Setup with Single Base Station

6.2 Installing RS232 Direct Communication Link

The 6200 DAS comes with a 10 ft (3 m) RS232 cable, terminating into DB-9 connectors. Refer to Figure 6.7 for pin out and wire color information. During the lab checkout procedure (see Section 2) you used this cable to connect the COM port on the 6200 DCP to the PC. However, during this checkout you did not need to route the serial cable through conduit or a feed-through gland. In order to use a RS232 communications link you may need to provide the cables and connectors for this installation. The RS232 cable should not be run more than 100 ft. (30 m).

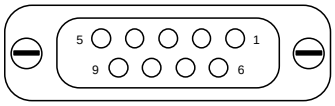

1 NC	-
2 TD	Red
3 RD	Black
4 DCD	Violet
5 SG	Shield
6 NC	-
7 NC	-
8 NC	-
9 NC	-

Figure 6.7 Serial Communications Cable, DB-9 Connector

One installation possibility is to use a short run of cable from the DCP COM port to a weather-proof communications junction box. The junction box should contain a terminal strip where you can patch through the cable wires to the main cable. This cable is then run to the base station hardware. You must carefully assess the potential problems with exposed cable and then decide if conduit is appropriate for routing the direct communications link. Refer to Figure 6.8 below to visualize one possible installation.

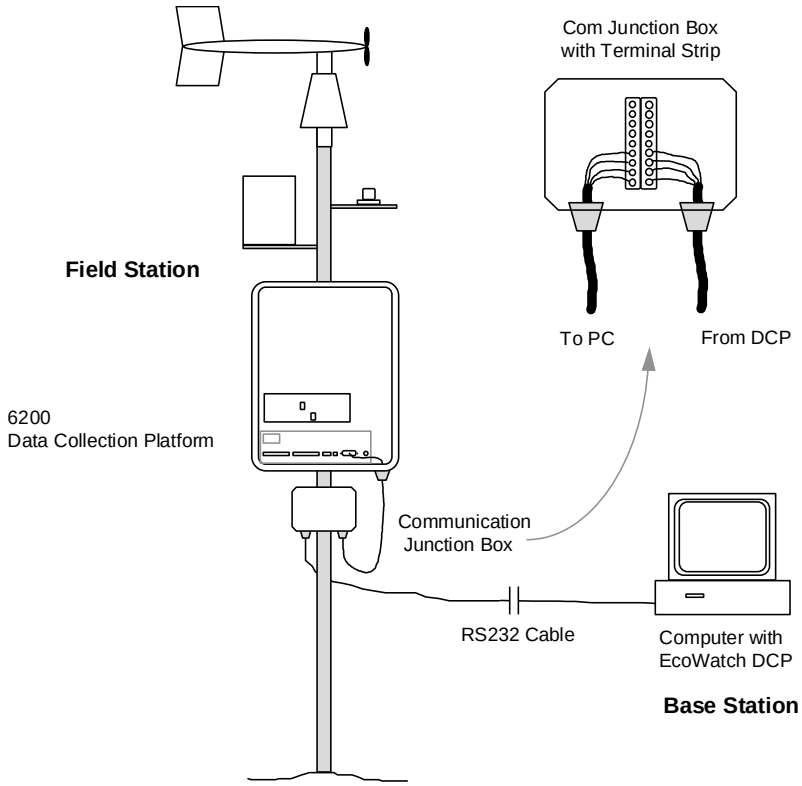

Figure 6.8 Direct Link Communications Installation Example

6.3 Installing RF Radio Communication Link

Field Station

IMPORTANT!
Always connect the antenna before powering the 6200 DCP.
This will avoid damaging the radio transceiver.

The standard two-way radio telemetry package includes two 2-watt transceivers (467.8 MHz), one field radio and one base radio. You are not required to obtain a license for this system. The field station radio is factory-installed inside the 6200 DCP enclosure. If you have not done so, install a suitable field antenna. This antenna should be part of the system you ordered. Once you have mounted the antenna to a tower or other appropriate supporting structure, connect the antenna cable. Connect one end to the N-type connector on the 6200 DCP and the other to the base of the antenna, using waterproof connectors. Refer to Appendix E to see a typical installation.

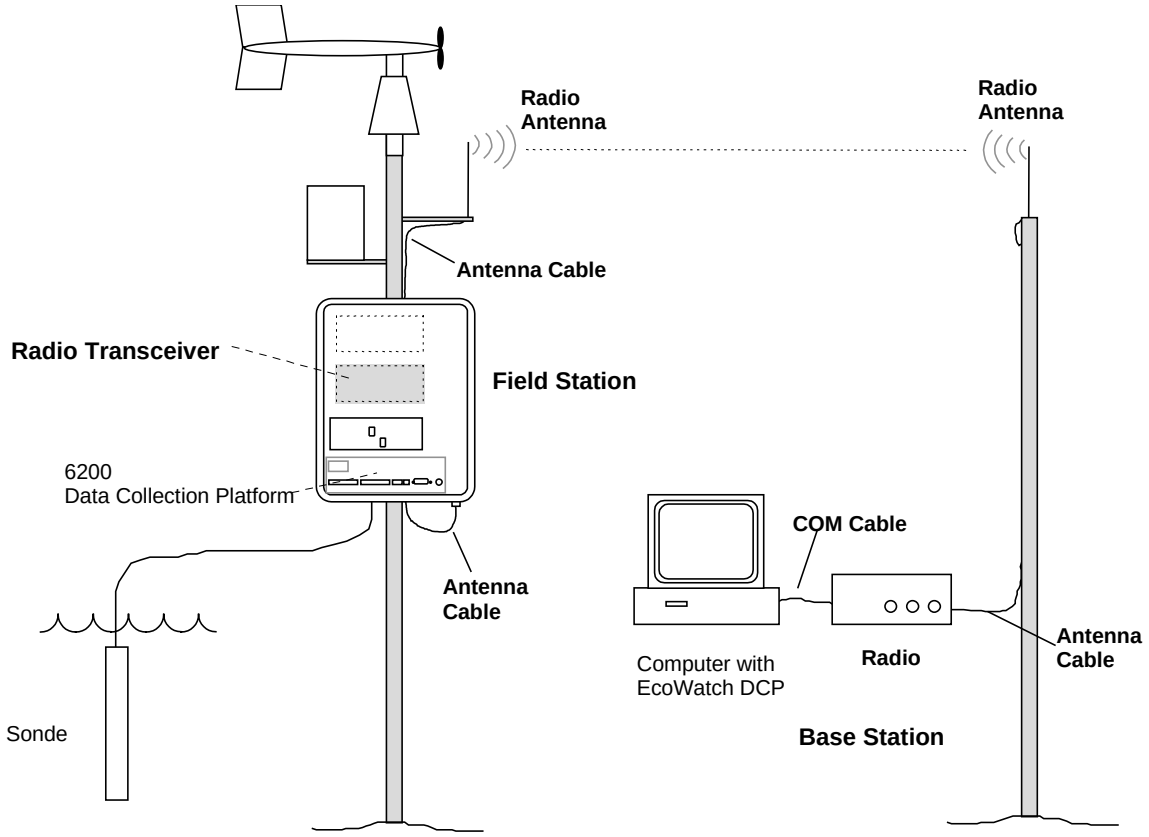

Figure 6.9 Two-way Radio Installation (overview)

Base Station Radio

The base station radio is AC line powered and connects with the COM cable (provided) to your computer. (see Figure 6.10). Install your base station radio near your PC. Keep in mind that the cable to the antenna will need to be routed outside to the roof. This antenna should be part of the system you ordered. The small whip antenna that was provided with the base radio is not intended for field use and is probably not suitable for communication with the field station. Once you have mounted the antenna to a tower or other appropriate supporting structure, connect the antenna cable.

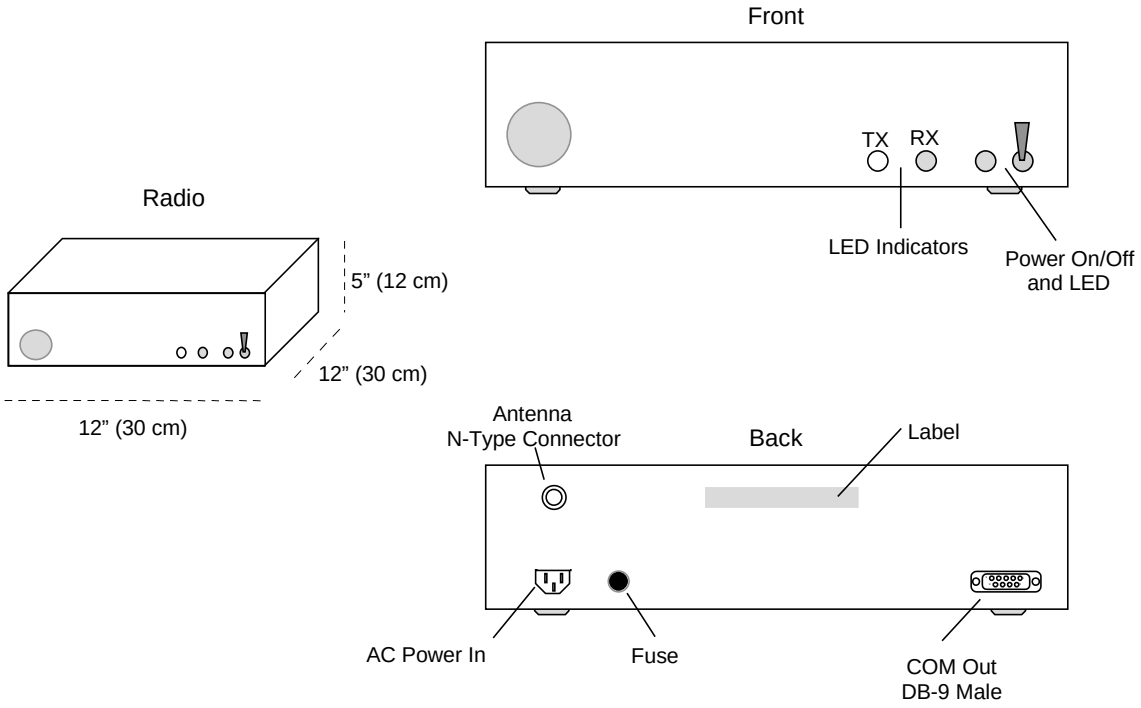

Figure 6.9 Base Station Radio

Next connect the COM cable (provided) from the base station radio to your PC COM port. Both connectors are DB-9 female. Power on the base station radio only when it is properly connected to its antenna, and the 6200 DCP has its antenna connected. Failure to have an antenna connected will result in a radio being damaged.

When using EcoWatch DCP, be sure it is setup to use radio as the communication method, and that the COM port is connected to the base station radio.

6.4 Installing Phone Modem Communication Link

The phone modem is factory installed within the 6200 DCP enclosure. It is set at 9600 bps and will only turn on when a phone call is detected. It powers off after 60 seconds of inactivity to conserve power.

Connect standard 3-conductor phone wire (0.25 diameter) to the 3-pin connector located near the bottom of the front panel inside the 6200 DCP. Direct the wire through one of the "feed-through" glands provided with the system and connect the other end of the phone cable to a telephone junction box (provided by user or local telephone company).

You must supply a compatible base station modem and the required telephone and serial cables. This modem may be external to your computer or may be internally installed. Refer to Figure 6.11 below.

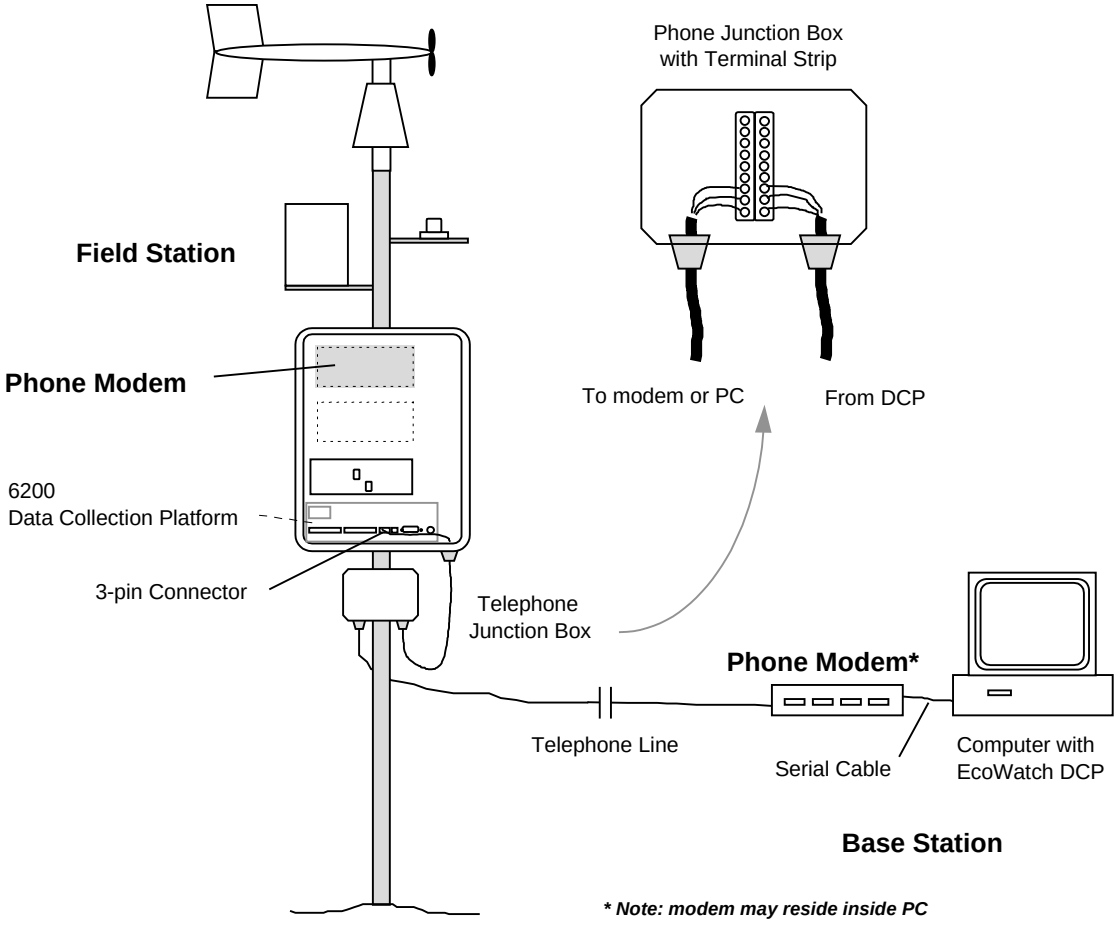

Figure 6.11 Telephone Modem Installation Example

6.5 Installing Cellular Modem Communication Link

The cellular phone modem package includes a full duplex wireless data transmission system installed within the DCP enclosure. The modem is factory-installed, and programmed with the cellular phone number you provided to YSI before it was shipped.

Mount the cellular antenna provided with the system to a suitable mounting structure. Connect the antenna to the N-type connector on the bottom of the 6200 DCP enclosure.

You must supply a compatible base station modem and any required telephone and serial cables. This modem may be external to your computer or may be installed internally. Refer to Figure 6.12 below.

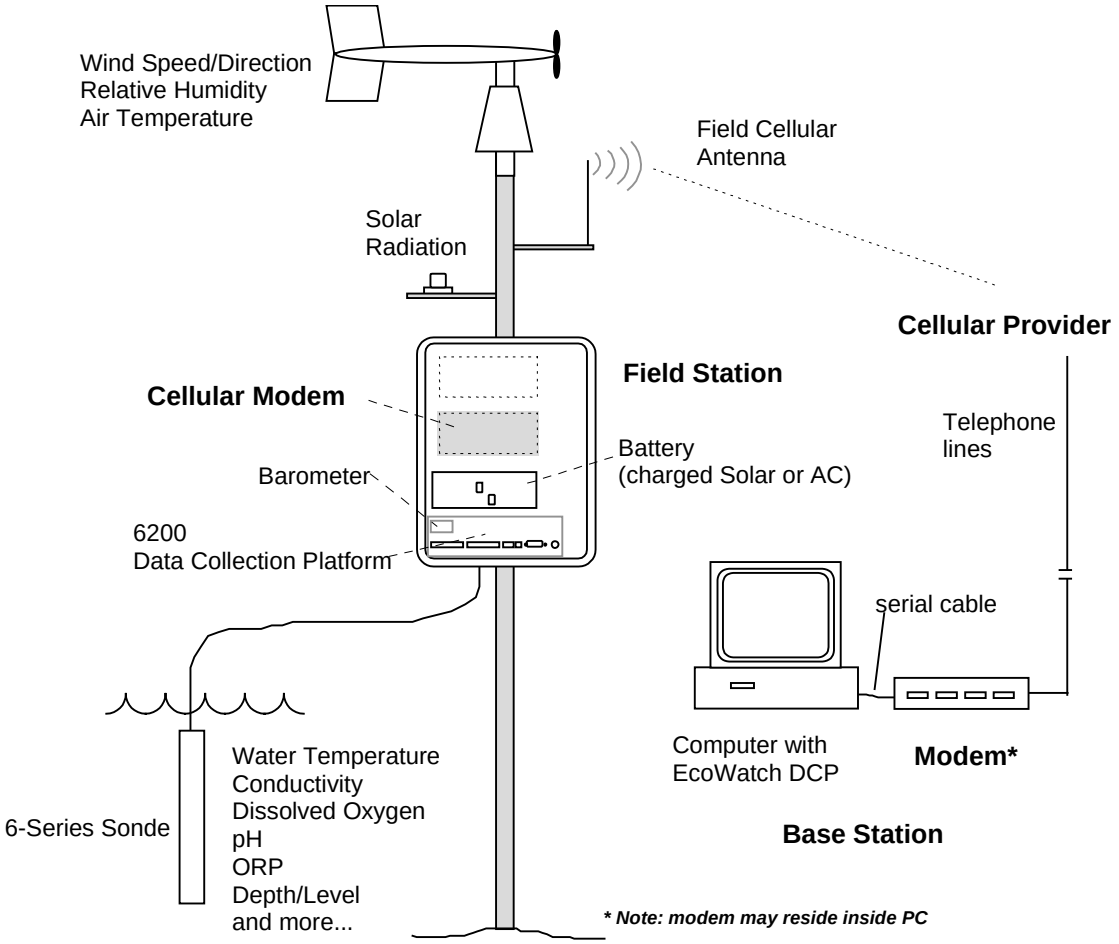

Figure 6.12 Cellular MODEM Installation Example

6.6 Setting Up Communication Parameters with EcoWatch DCP

After reading through the previous sections you should have a good understanding of how your particular communications method operates. EcoWatch DCP now needs to be setup for your particular method of communication. After it is setup you should test this method to confirm communication and scheduling of data.

To change communication methods you must know what COM port you are using for that communications option (i.e. the phone modem is on COM1). Click on 6200 then 6200 DCP Setup… then System… to bring up the 6200 DCP Setup menu as shown in the Windows 95 example below.

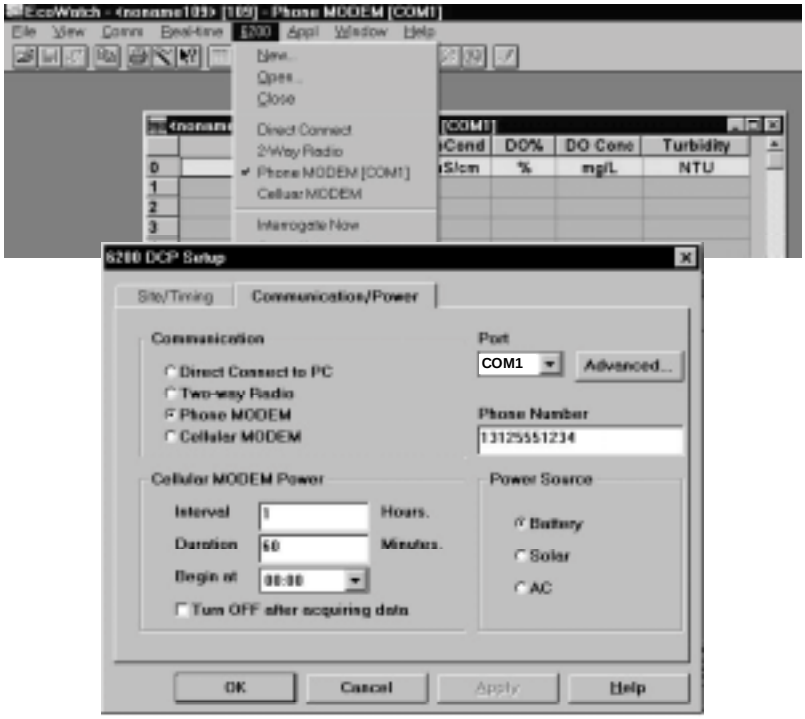

Figure 6.13 Setting Parameters for a Phone Modem Communication Link

Choose the Communication/Power tab to view the window shown above. In our example, note that Phone MODEM is selected and COM1 is the designated port where the modem connects to the PC. If needed, enter the phone number for the MODEM link in this box as shown in the example above. Click on OK to accept your choices.

You are now ready to test communication between your field station and base station. A good quick test might be to set the sample rate at 2 minutes, and the interrogation schedule to every 15 minutes. Set it up, then wait 15 minutes to verify that EcoWatch DCP interrogates the 6200 DCP correctly.

Cellular Modem Power Considerations

A few special considerations must be noted about the Cellular Modem Power. The Cellular Modem Power schedule cannot be changed through Cellular communication. EcoWatch DCP will not allow you to access many menus because the Cellular communications option is chosen. For example, you cannot interrogate the 6200 DCP when the Cell Modem Power is off.

The schedule for the Cellular Modem Power can be different from the interrogation schedule. A good Cellular Modem Power schedule might be something like: 12 hour power interval, 20 minute duration starting at 00:00(midnight). An interrogation schedule from 00:00 to 00:20 could then be used to get the data every night at cheaper phone rates. This would allow a 20 minute window during lunch (12:00) in which to access the system. If you ever do decide to make a change during the lunch window, be sure to interrogate to get all the data first, as any re-programming will erase all data stored in the DCP.

The Turn OFF after acquiring data box can be used to conserve power. If this box is checked, the cellular power will be turned off after a regularly scheduled interrogation.

Section 7
Completing Field/Base Setup and Collecting Data

7.1 Introduction

This section describes the tasks required to complete the installation of a 6200 Data Acquisition System. Tasks include:

- Preparing the base station
- Preparing the field site for the installation of the 6200 DCP
- Verifying the communications link
- Checking out the sampling and interrogation schedules

Before going to the field you will also need to set site/timing and communication/power parameters in EcoWatch DCP. Since the 6200 DAS features two-way communication, we also describe steps to reconfigure the system or sensor parameters, including the proper procedures to back-up and restore configuration files.

When you complete these instructions you should have a working, unattended field station. The DCP should be collecting data from deployed sensors at the sample interval rate you chose. EcoWatch DCP, using the communication mode you have chosen, should be interrogating the base station on the interrogation schedule you have assigned. If there are problems, carefully note any EcoWatch DCP warning or status messages that appear, then refer to Section 9 which includes some troubleshooting steps. Section 8 then describes how to manipulate, analyze and report data collected using EcoWatch DCP.

7.2 Completing Field and Base System Setup

Assumptions

In Section 2, Getting Started you were instructed to perform an initial lab bench setup to gain familiarity with all of the system components. We assume that you performed this checkout procedure, including checkout of your 6200 DCP, the sensors and the communication link as described in the Getting Started section 2 and Communicating section 6.

Preparing the Base Station

If you have not yet set up your base station, do this next. You should have installed EcoWatch DCP on the base station computer. You should connect the communication hardware (radio, modem or direct link) to the PC. If an antenna is required, you should install and connect it to communication hardware. If a phone line is required you should connect it and check it out. You should also verify that EcoWatch DCP and the base station are communicating properly.

Constructing the Field Site

NOTE
When selecting a site for the 6200 DCP avoid other installed equipment.
Do not run sonde cables parallel to other industrial or RF equipment.

If not already completed you should have performed as much of the permanent installation as possible (less the 6200 DCP). For example, secure the tower, install antennas, mounting brackets for sensors, solar panels or AC junction boxes, phone junction boxes, and similar supporting equipment. For descriptions of typical field station setups see Appendix E.

Getting Ready to Go to the Field

After verifying that the system works, you should reopen EcoWatch DCP from the base station PC. While using a direct link in the lab (serial cable provided) you should open a New configuration file. The filename you assign basically identifies the name of the field station (e.g., dock2.s62). All sensors that you plan to use at the field station should be connected to verify operation.

Archiving and Housekeeping EcoWatch DCP

EcoWatch DCP will generate new files each time a new system is setup. If you have gone through several setups during the initial check-out in section 2, you may have generated several files that do not contain useful data. This is the time to clean-out those files by either deleting them or moving them to a different location. The data files will be stored in the ecowwin\data folder, and the system files (*.s62, *.zcf, and *.ini) will be in the ecowwin\sys6200 folder. You may want to make a new folder like ecowwin\olddata in which to store these old files. Do not remove any files that start with an underscore "_". These files are used by EcoWatch DCP.

Creating the Field Station Files

Open a new file following the details in section 7.4. Once opened, the program proceeds through Config Wizard. Make certain the PC clock is set correctly, since clock synchronization between the 6200 DCP and the PC occurs automatically. All sensors, should be connected to the DCP, so that autoconfiguration identifies all sensors you plan to deploy in the field (verify that SDI-12 addresses are correct). You should enter the exact sensor calibration constants (as provided with the solar radiation and/or barometer sensors). You should assign the mode of communication <u>that will be used in the field</u> and enter appropriate information that may be requested in the configuration routine (e.g., cell or phone modem number). When you press Finish after autoconfiguration, the DCP is now active, so you should be certain that the battery is fully charged if solar or AC charging circuits are not active. If feasible, you may want to run your system as a field simulation. For example, you may want to set up your field station outdoors near the base station and test communication with base station hardware and software.

Sampling Interval and Power Cycle Considerations

You should follow the details in section 7.5 and enter the 6200 DCP Setup (submenu System…) menu to view the Site/Timing and Communication/Power windows. You should enter your desired <u>sample interval</u>. Remember this may be different than the interrogation interval. The default is a 15 minute sample interval (used by the 6200 DCP) and an interrogation schedule set to Same as Sample Interval, which is 15 minutes (used by EcoWatch). If using a modem (especially a cellular modem), you may want to interrogate the DCP less frequently than the sampling interval to save power. See section 6.6 for notes on cellular modem settings. We suggest that you verify modem and radio links before going to the field, by calling it frequently

and monitoring power consumption using the battery voltage indicator (internal sensor). Based on your findings, decide on the interrogation frequency.

Installing the 6200 at the Field Site

Having mimicked your field/base setup, you may now move your 6200 DCP to the field to install it in the supporting structures that should already be in place. Remove the battery during transport. The DCP will stop collecting data when the battery is removed, however the internal clock and configuration will not be lost.

Next you should permanently mount the DCP enclosure and connect power charging sources (AC or solar panel), communication hardware such as antenna or phone connection and the sensors that you will be using. Be sure to connect the antennas before any power source is applied. See Appendix E for installation examples. Lastly, reinstall the battery and reconnect the battery leads. The design of the 6200 DCP should allow these steps to be accomplished rather quickly. The 6200 DCP should now be able to communicate with the base station and will transfer data at the next scheduled interrogation time. During the field station installation, if EcoWatch was left running, the base station will try to interrogate with the 6200 DCP on its schedule. After the entire above installation is completed, data should begin to appear on the EcoWatch DCP data collection screen.

7.3 Verifying Field/Base Communication from the Field

We recommend that you have a person at the base station verify that when all connections are made at the field station. This is just to verify that EcoWatch DCP and the 6200 DCP are functioning properly and the interrogations are collecting data. You may choose to use walkie-talkies, cell phone, or another voice radio link to the base station person to verify the link, to check battery voltage, and to assure that no errors are occurring. To avoid waiting you may have the base station person use the 6200: Interrogate Now command to retrieve any data that may be in memory.

You now have an unattended field station collecting data at your specified intervals and relaying that information to base station software (EcoWatch DCP) for remote monitoring.

CAUTION!
Secure DCP enclosure with a padlock to prevent access
by other than qualified personnel.

7.4 Collecting Data with EcoWatch DCP

In this section you will see in some detail the steps needed to open a new file in EcoWatch DCP for communicating with the field station DCP and collecting data from sensors that are connected to this station. Let us assume that the communication link is phone modem, the power source is battery and both sonde and meteorological sensors are connected. Assume at this point that all hardware is connected. You are about to take the 6200 DCP to the field for permanent installation. Follow the example below, extending this to your particular application if power and/or communication modes differ.
Start by opening EcoWatch DCP, if it is not already running.

From the main screen click on the top line menu labeled 6200, then click on **New...** to bring up the screen titled "Save 6200 DCP Configuration File As". Type in a filename of your choice (8 character maximum).

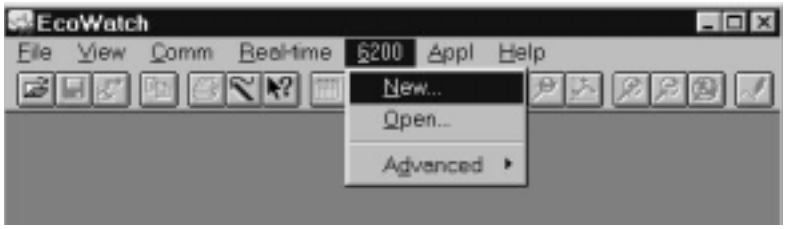

In the figure below the filename "dock2.s62" has been entered in the upper left hand block labeled File name:. Actually three files (.s62, .zcf, .ini) will be opened and saved in the location shown (c:\ecowwin\sys6200). You have the option to direct the .s62 file to a location of your choice, but we recommend that you accept the default path. Click on **OK** to proceed. Later in Section 7 you will learn to backup and restore configurations using commands in the Advanced submenu.

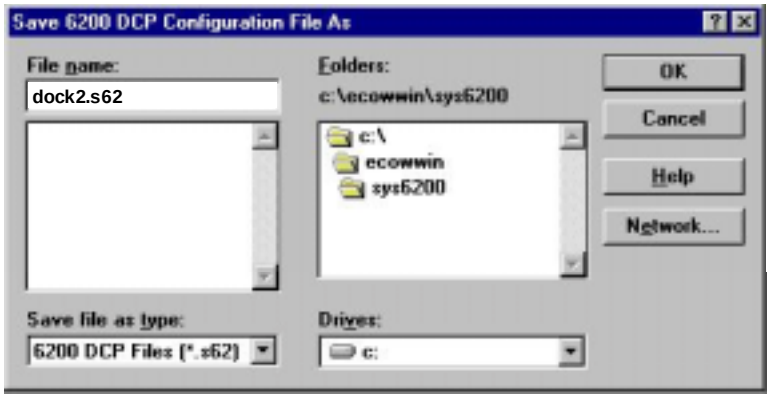

Configuration is automatic, that is the 6200 DCP and EcoWatch DCP communicate back and forth to, establish field communication mode, detect SDI-12 sensors, meteorological sensors, and synchronize clocks.

EcoWatch DCP uses your PC clock to reset the 6200 DCP clock upon startup. If these two clocks drift off you can use the 6200:Advanced:Synchronize Clock function to make the 6200 DCP clock agree with your PC clock. Daylight savings time needs to be taken into consideration unless you set your PC to ignore daylight savings time, (In Windows 95, Start:Settings:Control Panel:Date/Time:Time Zone tab checkbox).

If sensor calibration information is needed, this will be detected and you will be prompted to enter these calibration constants. If your 6200 DCP had been programmed previously and data collected, a warning message will appear asking you for confirmation that you do in fact want to open a new 6200 file. Follow the illustrations below which take you step by step through autoconfiguration (6200 DCP Config Wizard).

You may see this message if the 6200 DCP contains data from a previous configuration. In this example you are configuring your system to go to the field, so click on Yes and continue.

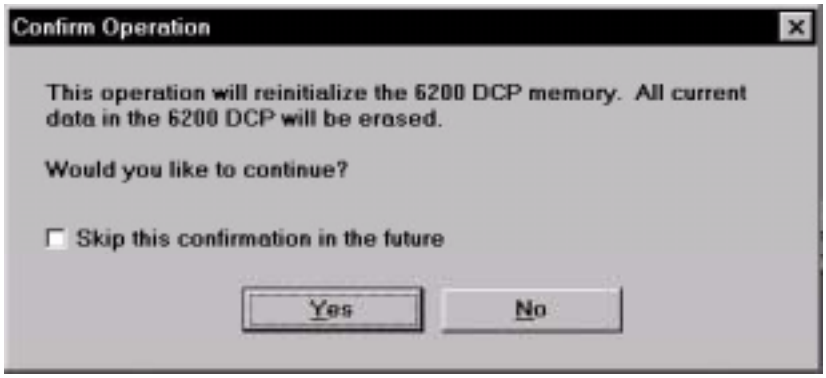

Next you may see a message that appears only momentarily. This message indicates that clocks are synchronizing. This is normal. Before you start make sure that your PC clock is set to the desired setting, since the 6200 DCP synchronizes to the PC clock.

EcoWatch DCP next attempts to detect SDI-12 sensors, such as YSI 6-series sondes. The addresses of the sondes should be assigned during their setup. Below you see that Sonde 0 has been detected.

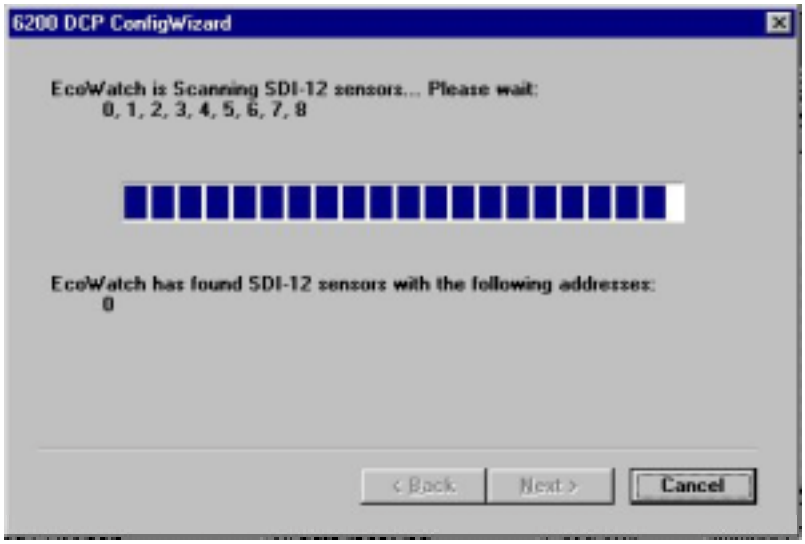

Next EcoWatch DCP attempts to detect MET (meteorological) sensors. Although addresses are not assigned to these sensors, you will later see in the data table which MET sensors were detected. If a barometer or pyranometer (solar radiation sensor) was detected, you will need to enter its respective calibration value that was shipped with the 6200 system.

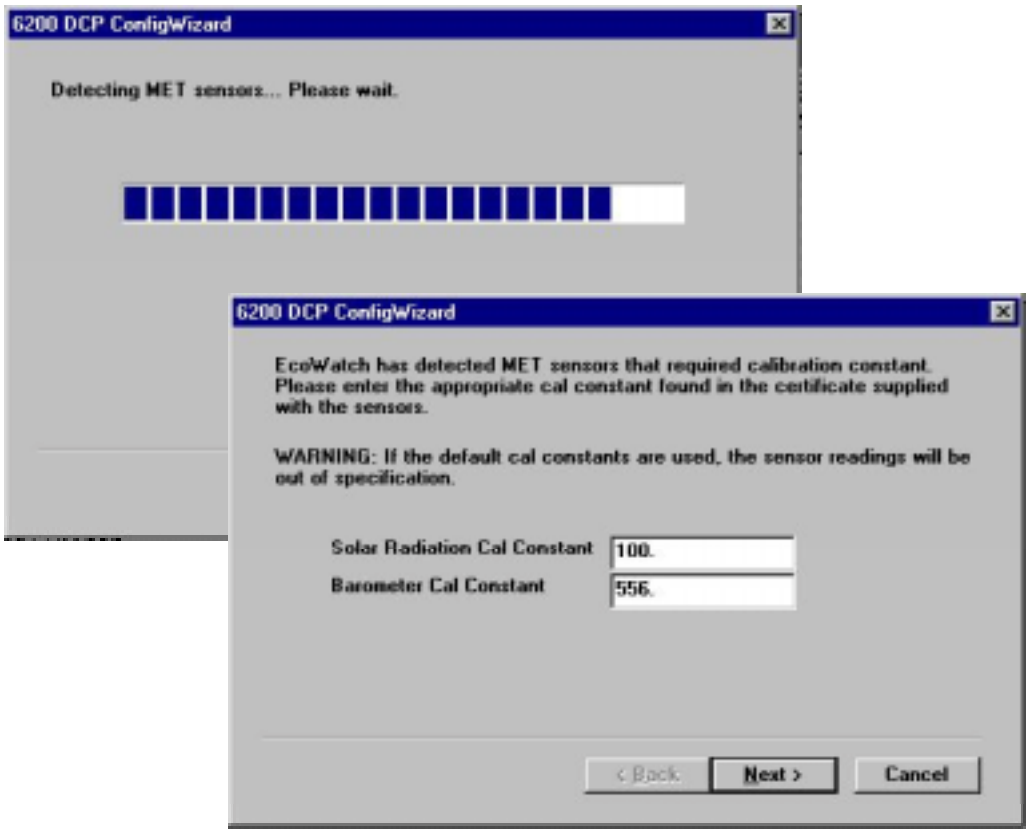

Next, EcoWatch DCP offers a list of communication options from which you must select the mode of communication that you will be using between the field installed 6200 DCP and the base station. Remember, even though you are now communicating with an RS-232 direct link connection, the information expected here is for field installation. Later in this section you will enter the appropriate phone number for the phone modem link used in this example setup.

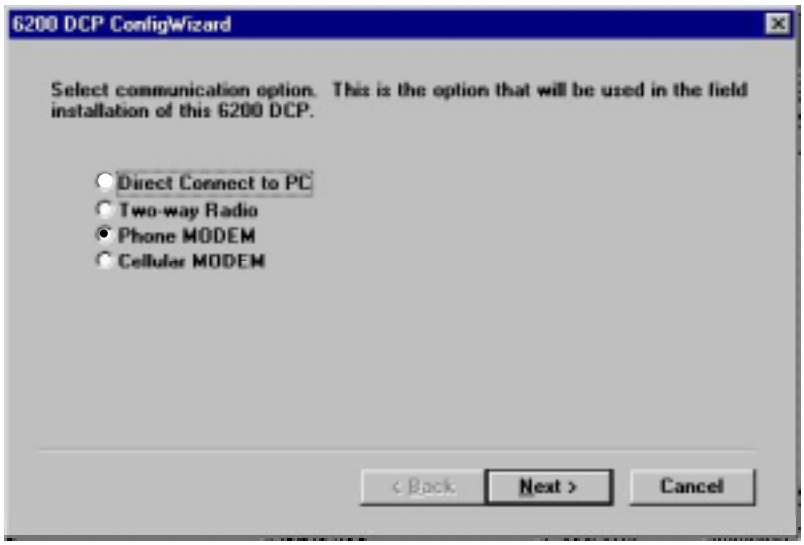

EcoWatch DCP now completes its configuration of the 6200 data collection platform located in the field station enclosure. A ConfigWizard screen appears as the configuration routine proceeds. Various messages appear near the top of the window describing the progress. The configuration may take 20-30 seconds. Refer to the next few screens shown below.

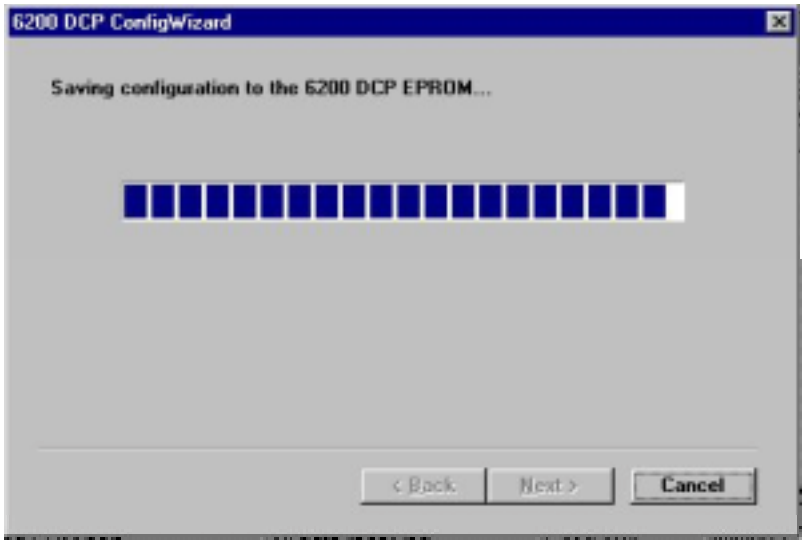

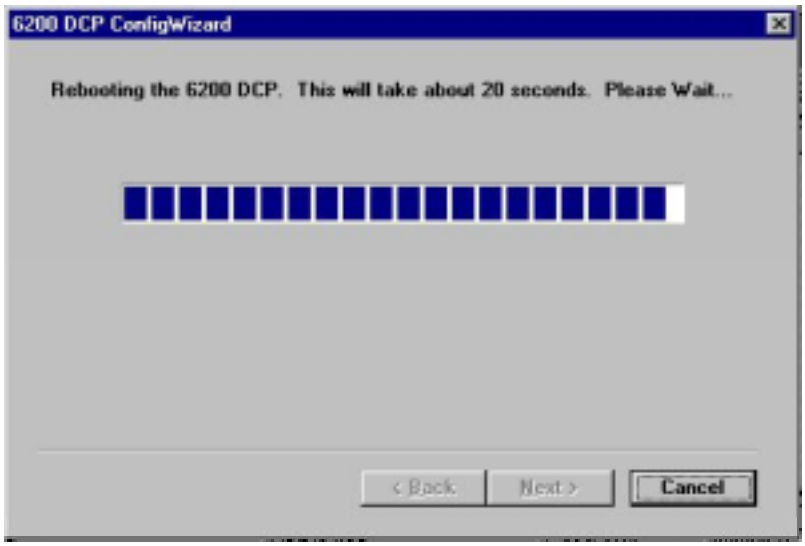

Once setup is complete a window appears to confirm completion. The 6200 DCP will beep for about 5 seconds during boot-up.

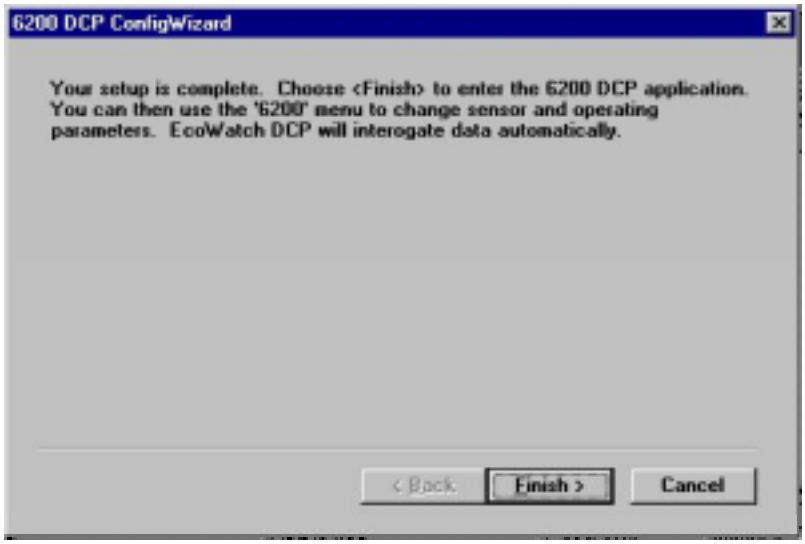

When you click on **Finish**, a data table appears showing headers with date/time and specific parameters for either sonde, MET sensor or internal sensor.

By clicking on one of the “tabs” at the bottom of the window you can move back and forth among the data tables. Note, you can not display more than one data table at a time and the maximum number of readings is 7 sets (or rows) of data.

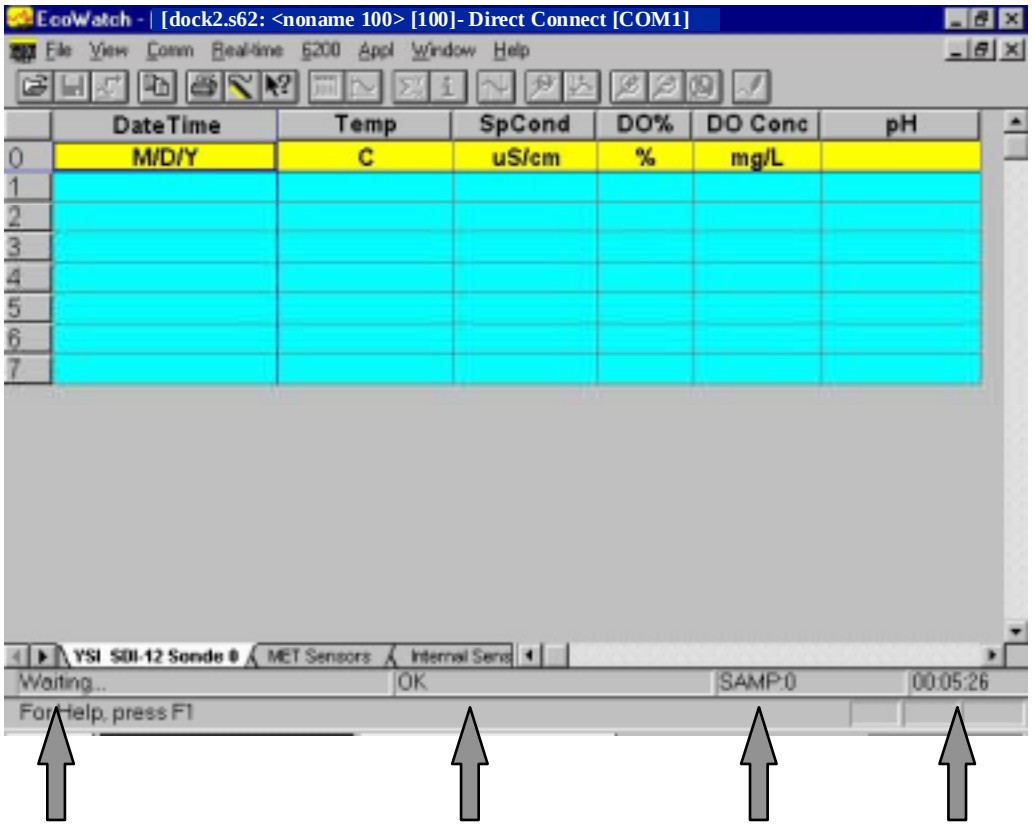

Once you complete the autoconfiguration steps, a window with a data table similar to that seen above should appear. The status box (bottom left) should display Waiting…, indicating that EcoWatch DCP is waiting for the next interrogation. The status box (bottom right) indicates the time to the next interrogation (5:26 in the illustration above). Next to the time status box is a number indicating samples collected from the DCP. SAMP:0 indicates that no samples have been uploaded since this 6200 DCP started taking data, which is what you would expect in this example of opening a new file.

Messages that you may see in the left status box are listed below. All are self-explanatory.

- Hanging up MODEM...
- Waiting...
- Interrogating...
- Closing COM port...
- Hanging up MODEM...
- Opening COM port...
- Check MODEM...
- Load MODEM option...
- Initialize MODEM...
- Reinitialize MODEM...

Messages that appear in the center error/status box provide information that may help you solve a problem. Above, you see that OK is displayed. This is the standard status message seen when a 6200 file is opened or created and it is waiting for the first interrogation. Additional messages are listed below, each followed by a brief description. These messages are not updated continuously, and only describe what has happened last.

All Data Received	6200 DCP has been successfully interrogated.
Duplicate	Duplicate data records were detected (same time stamp). EcoWatch DCP ignores duplicates.
No response from 6200 DCP	EcoWatch attempted interrogation, but the 6200 DCP did not respond.
Error from 6200 DCP	The 6200 DCP responded to an interrogation, but the result was an error. Usually caused by a mismatch in the number of parameters.
Port in use	COM port is being used by another 6200 component (e.g., terminal port).
Port busy	EcoWatch DCP can not open COM port. Usually caused by programs other than EcoWatch DCP using the port.
Error initializing modem	Can be caused by either field or base modem not responding to INIT string. Modem may be turned off, not connected, or incorrectly set.
Bad modem setting	Modem strings are bad. Usually caused when user sets strings rather than using default settings provided in the communications setting window.
No phone number	No phone number was specified. Rarely occurs since EcoWatch DCP prompts for phone number during setup of either cellular or phone Modem.
No carrier	No carrier
No dial tone	No dial tone. Modem probably not connected to phone line.
Dial timeout	Time out. Increase the timeout value if this happens often.
Line busy	Busy signal from phone number that was called.
No Answer	Timeout will normally override this error. Means the remote Modem does not answer.
Error	General Modem error.
Modem OK	Unlikely to see this message (appears only momentarily).
Low battery	The last interrogated data showed a battery voltage that was below the critical operating level of 10.7 VDC.

Presuming that you now have established successful communication between field and base stations and interrogation is occurring successfully, we next describe how to close a 6200 file and view a data file that allows you to better visualize and analyze data. The files for the various sensors are automatically assigned filenames that include important information. See below.

Close the 6200 file by choosing **6200**, then **Close**. Unlike the 6200 DCP files which have ".S62" extensions, the EcoWatch DCP data files have a ".DAT" extension. There is one data file for each set of sensors (SDI-12 Sonde, MET and Internal). Each data file contains encrypted information related to time and identity of the file. Using the data file below as an example (10782M20.DAT), note the following...

107 The field station number, assigned by EcoWatch, and incremented with each new field station.
8 The last number of the year, for example, 199**8**
2 The month of the year where 1=January, **2**=February and so on to 9=September A=October, B=November and C=December
M Type of sensor where S=SDI-12 sonde, **M**=MET, I=Internal (e.g., battery voltage)
2 SDI-12 Sonde Address, for example, Sonde Address **2** as shown above
0 Number indicating the set of data opened for a given record, **0**=initial set. If you change a report parameter or measurement unit for a file, the number increments to 1, 2, 3 and so on.

Use the **File** command on the top level menu of EcoWatch DCP, then **Open**. Select the drive and subdirectory where the data files are located, usually c:\ecowwin\data. Highlight then click on the data file of the record number and sensor type you wish to observe.

Refer to Section 8 Reporting and Plotting Data with EcoWatch DCP for detailed information on data analysis and data reporting.

7.5 Reconfiguring Sensors and System with EcoWatch DCP

Since the 6200 DAS allows two-way communication, you may not only upload data collected by the DCP but also change sensor and system settings. For example, if you now have your 6200 DCP operational and want to change the sample interval from 15 minutes to 30 minutes you can enter the 6200 DCP Setup menu and do this over the phone modem communication link.

As in the example below, access the system setup menu by clicking on **6200**, then highlight **6200 DCP Setup…**, then **System…** You will first see a warning screen that asks you to confirm your intention to change settings. You are alerted that any data that has not been uploaded to EcoWatch DCP will be lost. Proceed by clicking on **Yes**, if you can accept this condition. To be sure you have all of your data before making a change, click on No, return to 6200 menu and click on Interrogate Now to upload any remaining data.

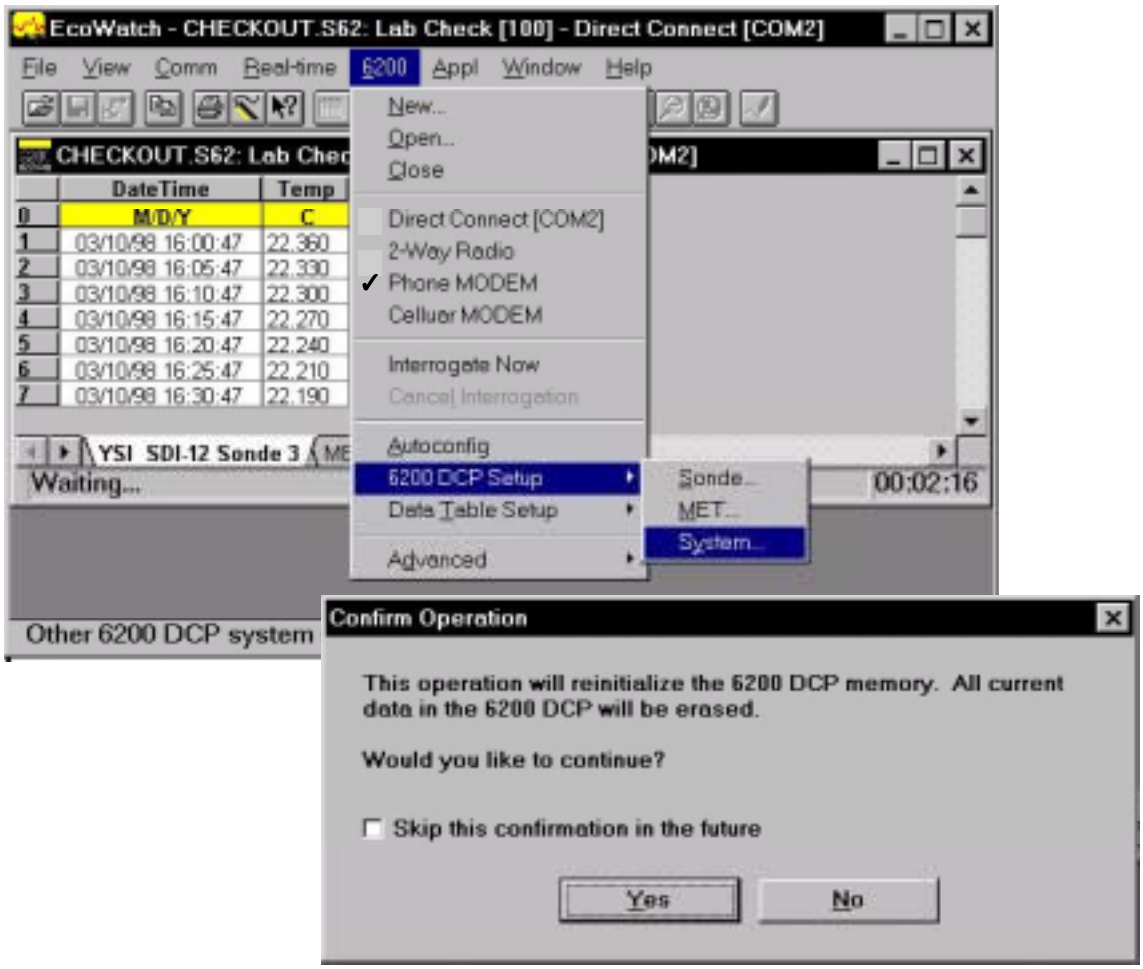
EcoWatch - CHECKOUT.S62: Lab Check [100] - Direct Connect [COM2]
File View Comm Real-time 6200 Appl Window Help
New...
Open...
Close
Direct Connect [COM2]
2-Way Radio
Phone MODEM
Cellular MODEM
Interrogate Now
Cancel Interrogation
Autoconfig
6200 DCP Setup
Data Table Setup
Advanced
Sonde...
MET...
System...
CHECKOUT.S62: Lab Chec
DateTime Temp
M/D/Y C
1 03/10/98 16:00:47 22.360
2 03/10/98 16:05:47 22.330
3 03/10/98 16:10:47 22.300
4 03/10/98 16:15:47 22.270
5 03/10/98 16:20:47 22.240
6 03/10/98 16:25:47 22.210
7 03/10/98 16:30:47 22.190
YSI SDI-12 Sonde 3
Waiting...
00:02:16
Other 6200 DCP system
Confirm Operation
This operation will reinitialize the 6200 DCP memory. All current data in the 6200 DCP will be erased.
Would you like to continue?
Skip this confirmation in the future
Yes
No

Notice that there are two folders: Site/Timing and Communication/Power. Site/Timing should appear first and the Description box may be highlighted. By default, it reads <noname100>. The record number 100 may be any number between 100 and 999 since this value increments each time a new field station is added. You may type in a description of your choice or you may tab to the next box, therefore accepting the default description. In our example we type in Clear Lake, Dock 2 to identify the location we are using.

The next box lists sample interval. This is the time that elapses between samples being logged to the 6200 DCP. The default value is 15. We suggested above that we would change this to 30 minutes to illustrate the use of system setup changes. Do not confuse this with EcoWatch DCP interrogation timing. Even when EcoWatch DCP is not running, the DCP continues to log data to its memory once it has been configured.

Interrogation timing is listed under the Interrogation Schedule as shown below. In this example interrogation time also changes to 30 minutes (i.e. Same as Sample Interval). We will not change this now, but if you wanted to phone in data via modem only once or twice a day, this can easily be configured under Interrogate every… [ ] minutes, as seen in the second interrogation schedule option.

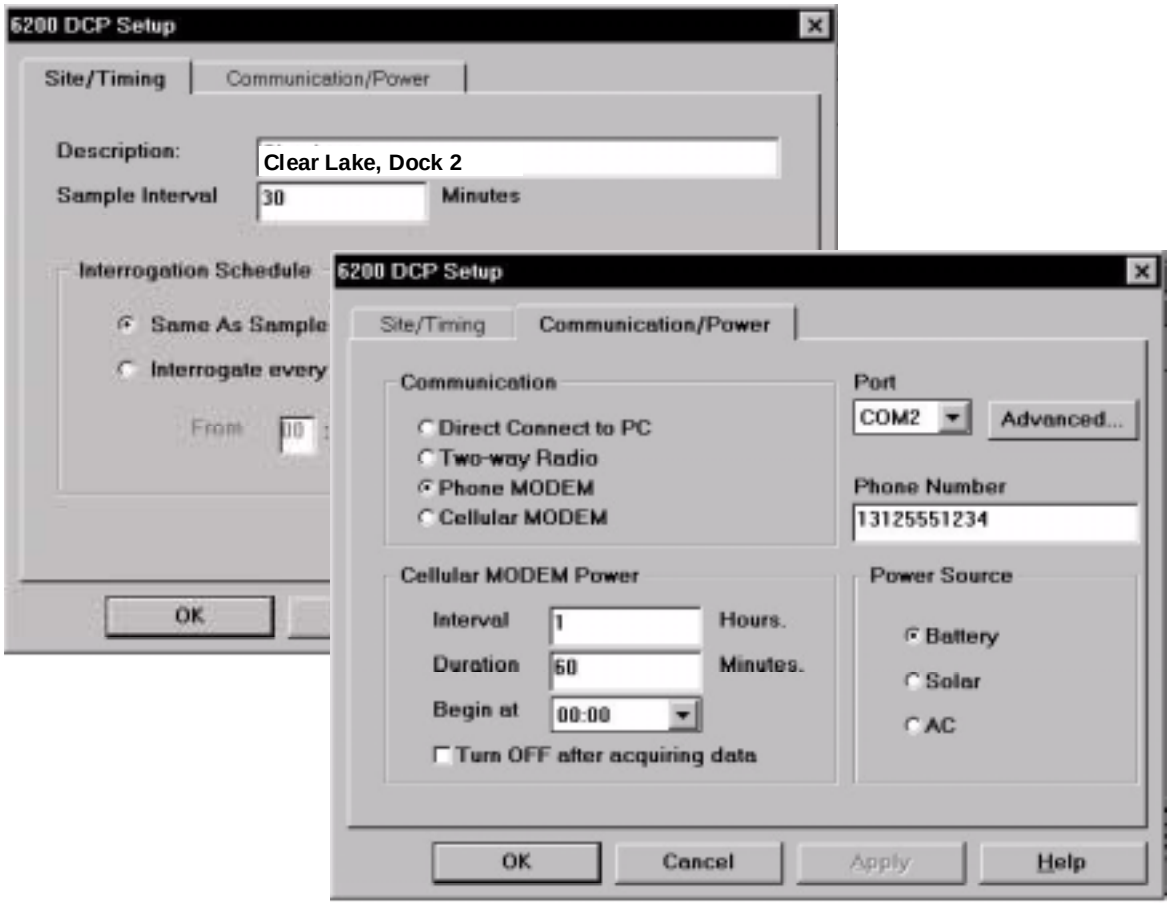

Now click on the **Communication/Power** folder and verify that communication is Phone MODEM and the COM port agrees with the serial port to which you are connected (COM2 in our example screen). The appropriate phone number should be typed into the box in the upper right quadrant of this screen. If not, do so now. The power source in our example is Battery, but you should put in whatever power source your have installed.

Click on **OK** to exit the menu and return to the main EcoWatch DCP menu screen. A window appears momentarily, displaying the message Programming 6200...Please Wait. You have now completed reconfiguration of the 6200 DCP through EcoWatch DCP. Only one parameter was changed, i.e., sampling interval. You should now look to the countdown timer box in the lower right portion of this "new" configuration of the 6200 and view a number near 30 minutes, reflecting the change that was made.

7.6 Backing Up and Restoring DCP Configuration Files

Use of the backup function is not required, but highly recommended if you want to minimize your risk of losing access to the 6200 DCP. There are a variety of ways that you could lose data, but two of the most common are; (1) accidental reconfiguration of EcoWatch DCP during a study (e.g., inquisitive coworker), and (2) a communication failure such as storm damage to a radio or phone system. Whatever the cause, you will be able to recover data from the DCP if you have properly backed up the 6200 configuration files.

Right after you have completed setting up a new 6200 file, go to the **6200:Advanced** menu and highlight **Backup Configuration**, then proceed to insert a diskette into drive A of your PC. Follow the prompts which will instruct your PC to copy files to the diskette. The files have the name you assigned to open the 6200 files and include extensions .s62, .zcf and .ini. In the event you need to restore this configuration to your system, use the Restore Configuration command using the backup disk you created.

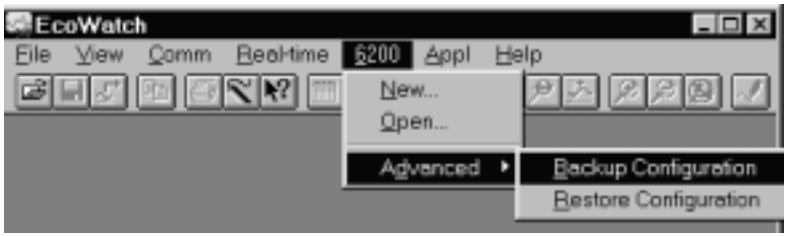

In addition to the examples above for using the backup and restore functions, you may also find this feature useful if you need to travel to the field station for troubleshooting. Backup the configuration from your lab PC to the laptop. Then you will be able to access the 6200 DCP with a direct connection (COM cable) from the laptop to the 6200 DCP at the remote site.

AutoConfig

The AutoConfig feature of EcoWatch DCP allows you to re-configure your field station through your communication method in one step. If you ever feel that your data is incorrect or your station is not properly setup, use the AutoConfig feature first to re-synchronize the field and base stations. The AutoConfig function is similar to the New function, but works with your existing communication setup. This feature should be the first thing you try if trouble occurs.

Section 8
Reporting and Plotting Data with EcoWatch DCP

8.1 Introduction

There are many features in EcoWatch DCP related to viewing, plotting, manipulating and reporting data collected from the 6200 DCP. In this section we describe some of the most common functions you will use. As with the 6200 DCP menu described in the previous section, a convenient Windows Help section and tutorial is available to guide you through the examination of your data. We recommend that you use these help features for a comprehensive understanding of EcoWatch DCP.

For the purposes of describing and demonstrating EcoWatch DCP plotting, reporting and data manipulation capabilities, we use the file SAMPLE.DAT, located in you data folder. This file will be copied to your hard drive during EcoWatch DCP installation and should be available for you to follow the instructions below.

When you are ready to move beyond the SAMPLE.DAT example and analyze data collected from the 6200 DCP, locate and open the appropriate .DAT file. These data files are located by default in c:\ecowwin\data\. An example filename is 1097CM01.DAT. This filename contains important information that was described in Section 7.4. Do not change the filename of the 6200-created .DAT file until you are completely finished using the .S62 configuration file that is associated with this set of data.

NOTE: In the instructions below that refer to clicking the mouse button, we always refer to the left mouse button unless otherwise specified.

8.2 Opening a Data File

If EcoWatch DCP is not running, double click on the EcoWatch DCP icon. Click on **File** to view a drop-down menu similar to the one shown in Figure 8.1 below. From this menu click on **Open**, then locate the drive and directory where SAMPLE.DAT (or your file of interest) resides. Alternatively, if you have been using EcoWatch DCP during setup and checkout, you may be able to click on the file of your choice in the most recently opened files.

Once the SAMPLE.DAT file is open you should see a plot (Figure 8.1) which graphically represents 7 days of sonde data for 6 different water quality parameters plotted as a function of date and time. Each set of data is autoscaled to allow you to see the minimum and maximum values for each parameter during the one-week study.

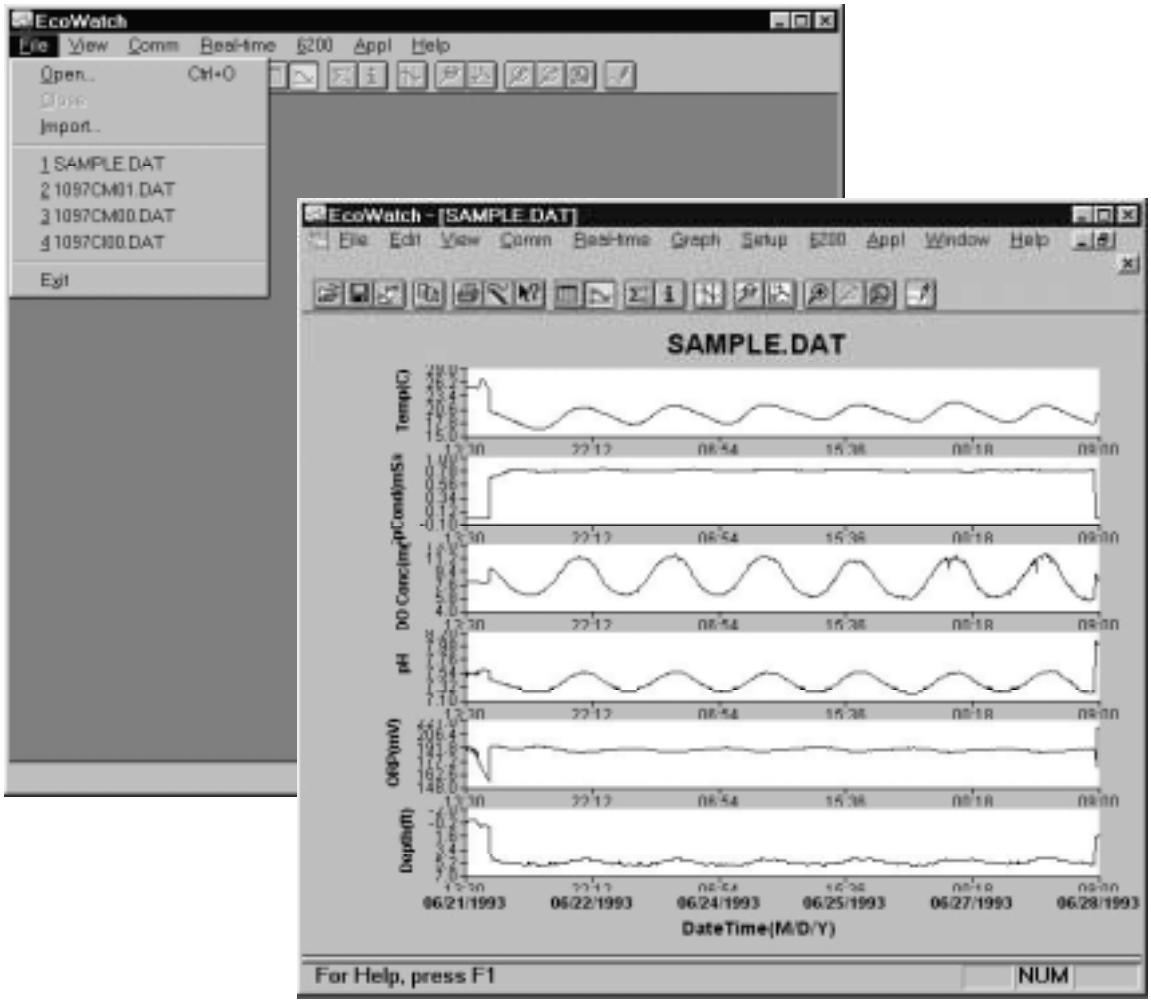

Figure 8.1 Opening a File

You may immediately notice some daily variations in parameters such as dissolved oxygen, pH and temperature in this particular study. This is fairly typical in many natural bodies of water. Note also that conductivity is low at the beginning and end of the study. Other similar perturbations at the beginning and end may also be evident. In this particular study, the sonde was not in water when the data collection started, but you can see when it was put in the water (left side of graph). In fact, you can see in the bottom graph the approximate depth of water at which the sonde was deployed. Likewise, the data collection continued beyond the point where the sonde was removed from water (right side of graph). In between, data were collected at 15 minute intervals.

Notice that you now see a new set of menu items in the top line. Some of these functions are specifically related to viewing and manipulating data. Next we will examine some of the viewing options.

8.3 Viewing Data

To look at some of the viewing options, click on **View**. Note that the Toolbar and Status Bar are turned on (check mark). In addition, the 4-Digit Year expression is checked. This option may be especially useful and desirable as we move to the next millenium. Also note that a check mark is just left of the Graph choice (see figure 8.2). This explains why all data are expressed graphically in the opening window.

To show data in both graphical and data table format, highlight the **Table** menu item. The graphical portion of the window compresses some and the data table becomes visible below. If you then click on **View** again, you see that both Graph and Table items have check marks to the left, indicating that both functions are turned on. You may use your mouse to scroll up/down and left/right to view data.

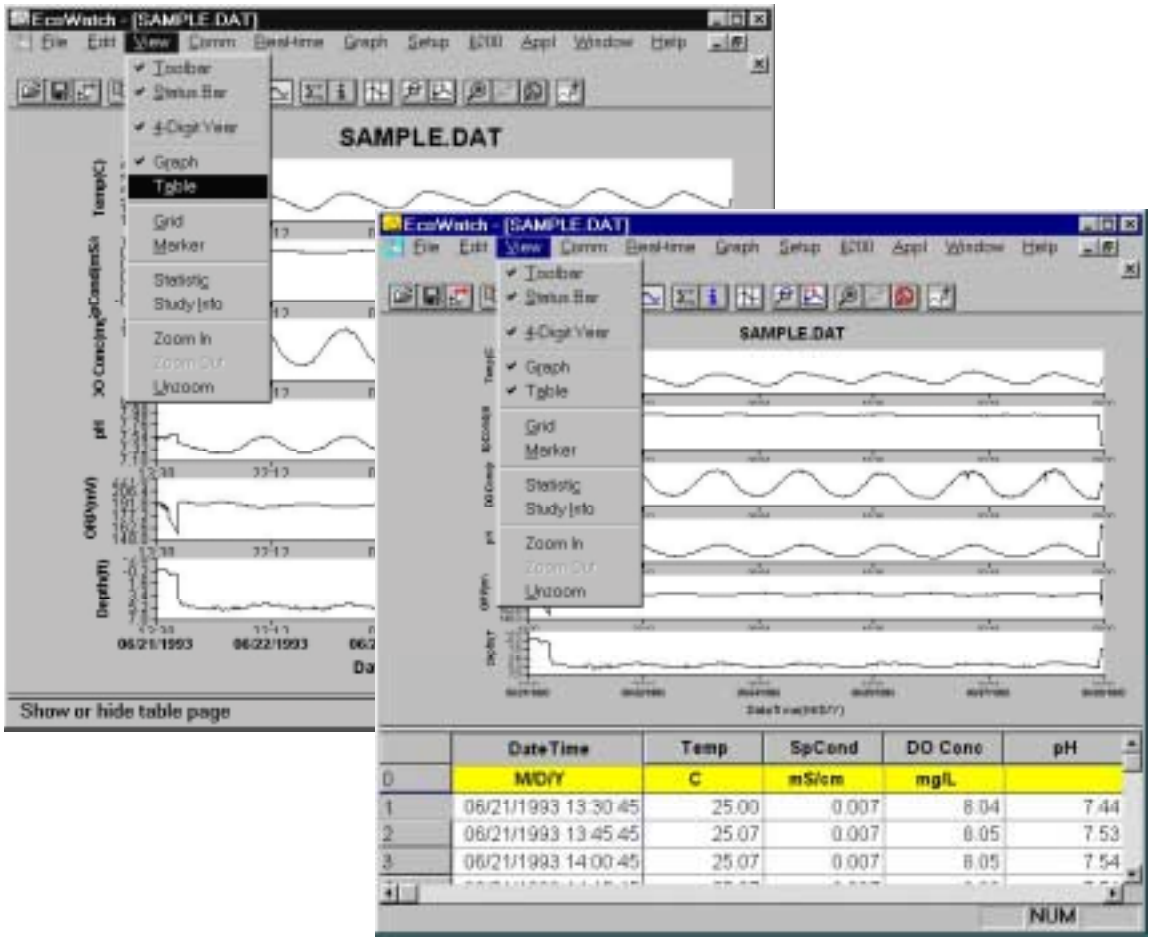

Figure 8.2 Viewing Options

It may be somewhat awkward to scan the data table in this manner, therefore you have the option to turn off the graphical representation and allow the table to fill the window (see Figure 8.3). Click on **View** then **Graph**. Now, when you click on **View**, the Graph item is no longer checked.

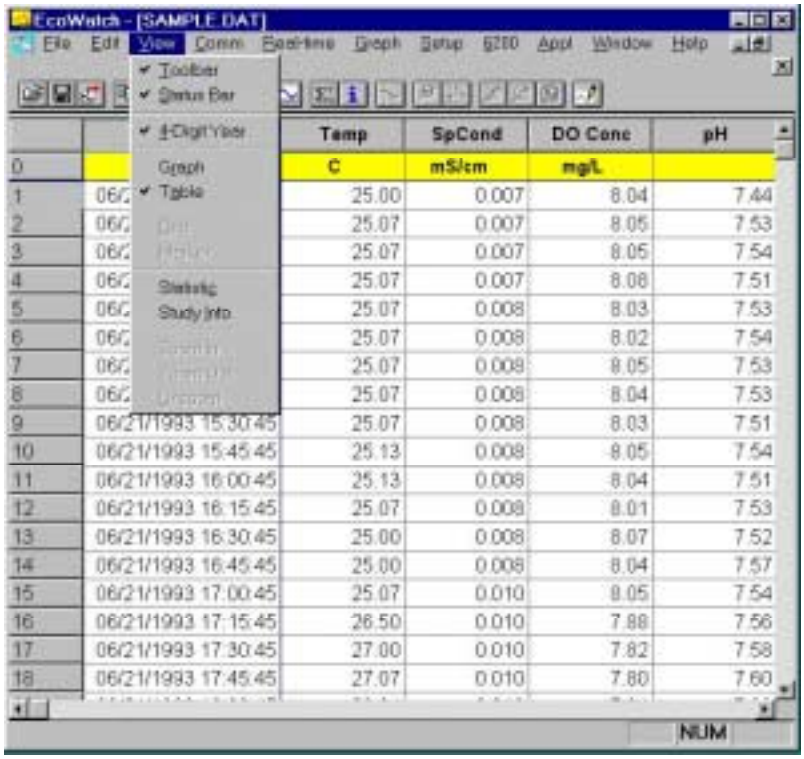

Figure 8.3 Viewing the Data in Table Format

Viewing features such as Grid, Marker, Zoom In, Zoom Out and Unzoom are all available when you activate the Graph function. Give each a try as you practice and learn more about the many features of EcoWatch DCP.

The Statistics and Study functions of EcoWatch DCP are shown in Figure 8.4. Both provide overview information related to the study data. The Statistics function lists minimum, maximum, mean and standard deviation information for each parameter activated. The Study function provides useful information about the design of the study including sample interval, date/time, number of samples, sensor identification and parameters reported.

To view either of these windows, click on **View**, highlight the desired function and click again. The window opens on top of the table or graph, similar to what is shown in Figure 8.4. Only one of these windows may open at a time. To continue, you must close the Statistics or Study window to return to the graph or table and activate the top line menu again.

As before, practice viewing the functions mentioned above to gain more familiarity with these features.

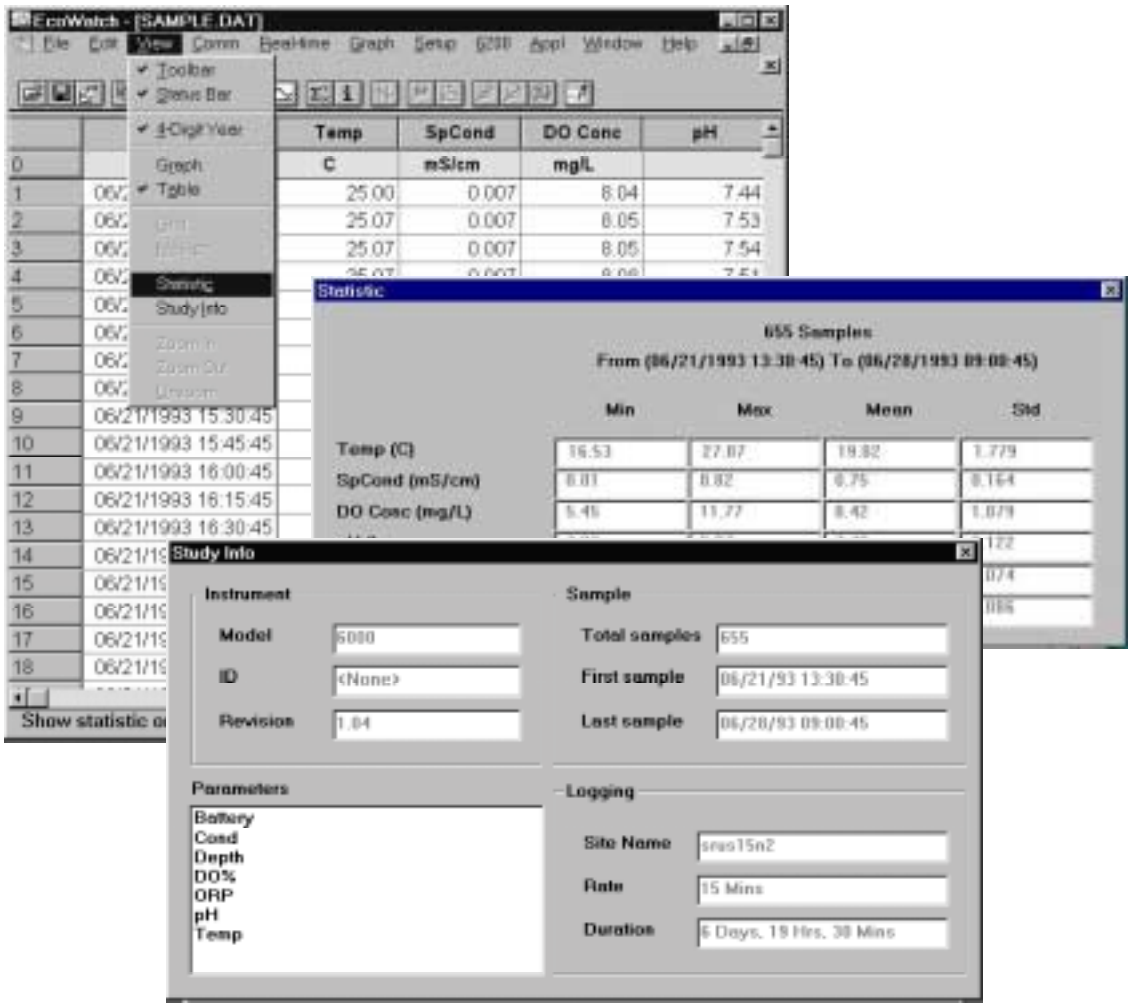

Figure 8.4 Statistics and Study Information

Next, with the Statistics and Study windows closed, return to the **View** menu, close **Table** and activate **Graph**.

Using the right mouse button, click at any point on the graph. A dotted vertical line appears along with specific data values in boxes to the left of the displayed graphs (see Figure 8.5). You can hold down the right mouse button and move the mouse to scan the entire graph that is displayed in the window. The values in the boxes change as you move the mouse. This feature is very useful for quantifying specific data without the need to open the data table and scroll through what may be thousands of data points. Note also that the exact time and date change to let you know specifically when an event of interest occurred.

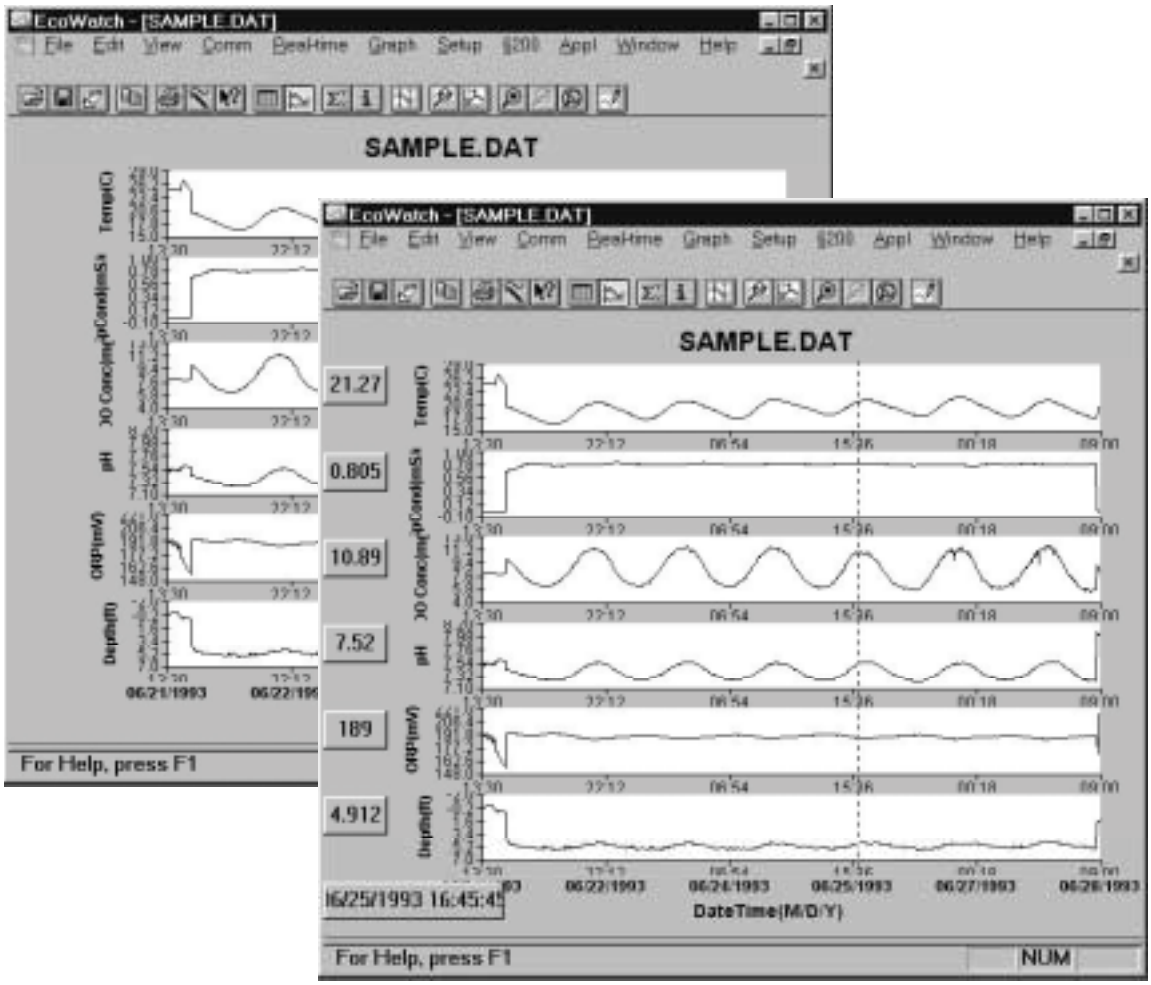

Figure 8.5 Viewing the Data with Right-Button Mouse Function

8.4 Changing Display Formats using Setup

Beyond selecting data viewing options such as table format or graphical format, you may also customize your data displays. For example, you may change the order in which parameters are viewed, you may add and delete parameters, you may change plot appearance using different interval times and different units, and you may change the x-axis if you prefer a parameter other than date or time.

The Top Line menu selection that allows you to select some of these parameter changes is Setup. Click on **Setup**, then **Parameters**. From here there are four submenus that allow you to Add/Remove parameters, change Units, change sample interval and/or x-axis (Attributes) and change the Names of the parameters you have assigned (see Figure 8.6).

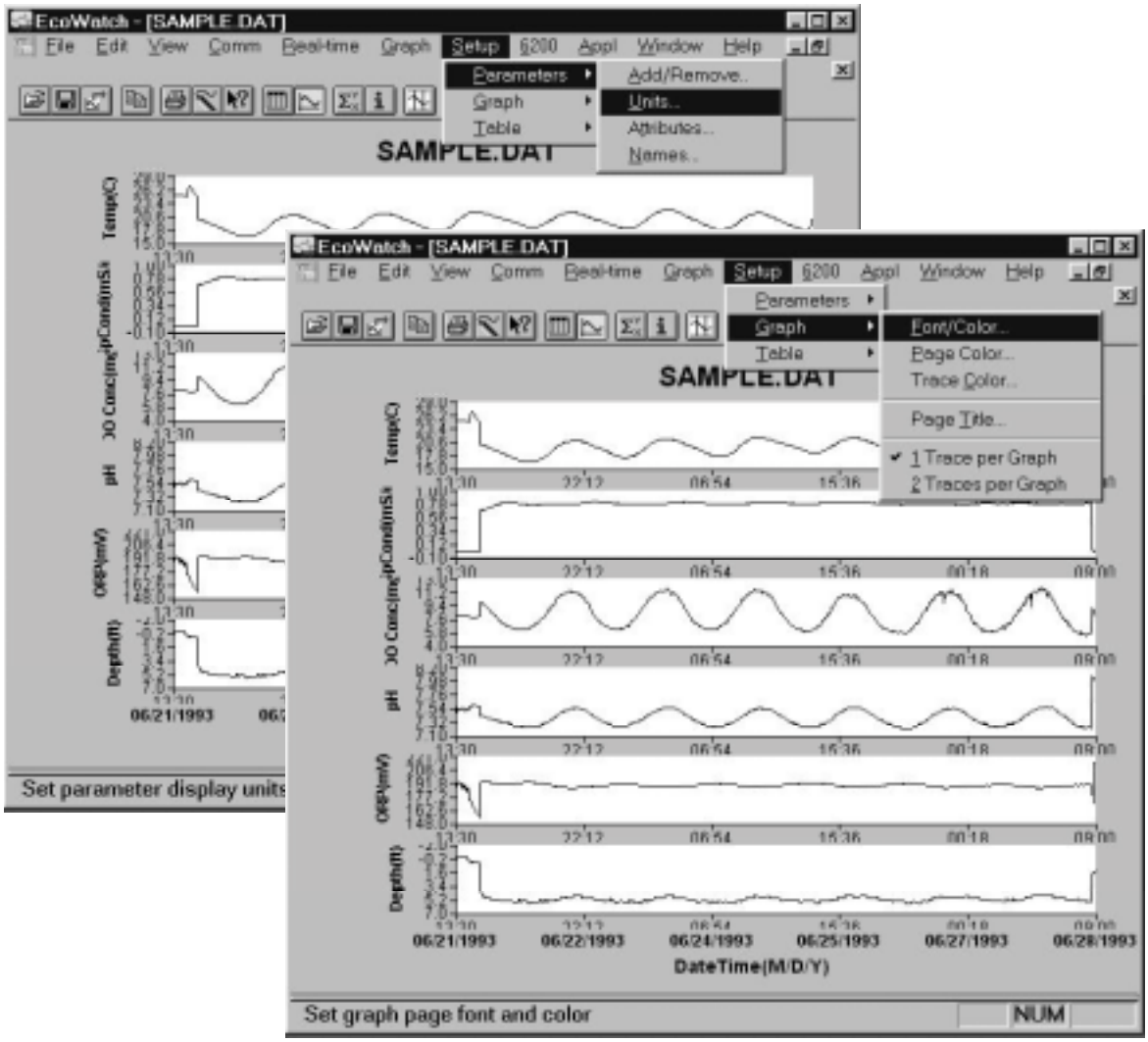

Figure 8.6 Changing the Appearance of a Graph or Table

If you are displaying the graph, you may change the appearance by changing font, font style, size and text color. You may also change page color, trace color and graph background color. You may assign a custom 2-line title for the graph, and finally, you may display 1 trace or 2 per set of axes. For display of table formatted results you may change font, font style, size and text color. In addition, you may change table color and highlight color.

The menu structure is easy to follow. Try some changes to gain familiarity with these Setup display options.

8.5 Changing Display Formats using 'Graph' Function

The top line menu labeled Graph, as the name suggests, can be used to examine critical events within the graphical format. You may be able to more clearly understand an event by zooming in/out, centering an event of interest, and setting limits to focus in on a specific area of the graph. In addition to modifying along the x-axis, you may also manually scale the y-axis. This may allow you to discard a noise spike and obtain better resolution of events unrelated to the noise. Functions like Autoscale, Redraw and Cancel Limits are all used to "undo" some of the customization functions. Below in Figure 8.7 you see some of these functions.

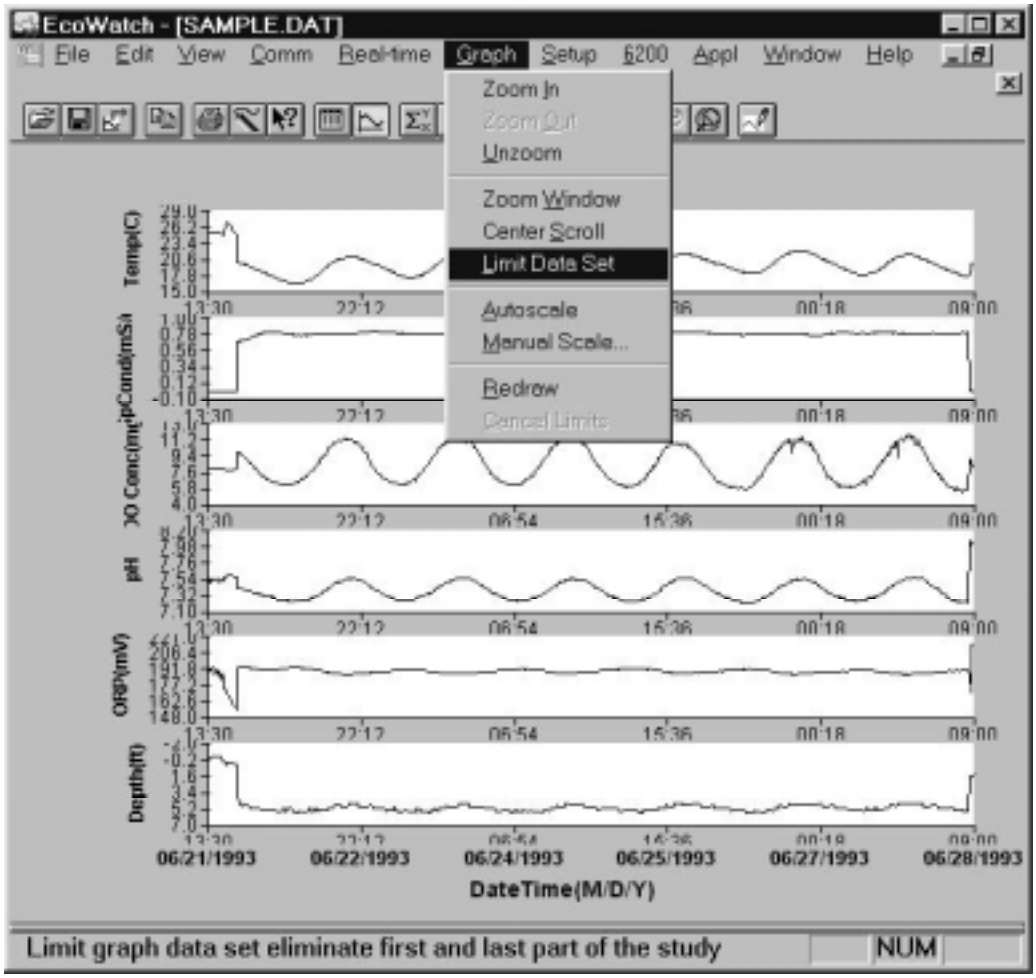

Figure 8.7 Selecting a Subset of Data within a Graph

One very commonly used function is Limit Data Set. If you choose this function by clicking on the highlighted item as shown below, you then use the mouse to move your cursor to the left limit of an area of interest, click once, then move the mouse to the right limit of interest and click again. The result will be a close up look at the specific area of the graph you have defined. Refer to Figure 8.8 below to see the results of this particular feature.

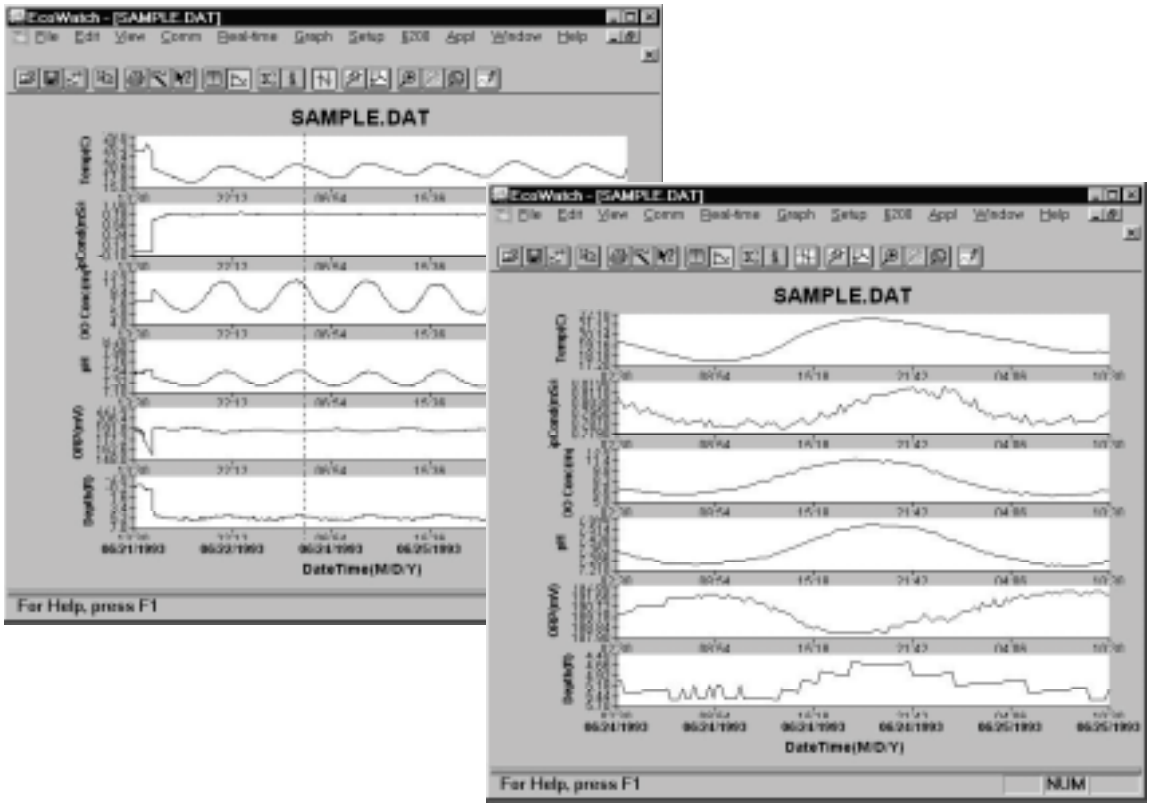

Figure 8.8 Using Limit Data Set to Display a Subset of Data

To return to the full set of data again, click on Graph, then Cancel Limits. If you desire a hard copy of any graph or table, or even a subset expression as shown above, you may use the Edit, Copy command to 'copy' the graph in the active window to the "Clipboard". You can then 'paste' this graph to the Windows application program of your choice. You may also be able to print graphs and tables as described in the next section.

8.6 Save, Import, Export and Print Commands

Under File function in the top line menu, you can save a particular .DAT file that you have customized, and rename it if you like. You may export it as a .CDF file or print it to a compatible printer. You may create a .RPT (report). You may save a data format that you have created and recall it in the future. With this function you can create several formats, save them and load them as you need in the future. See Figure 8.9 for the File menu, which includes some of these commands. Use the Window's Help function to learn more about these features.

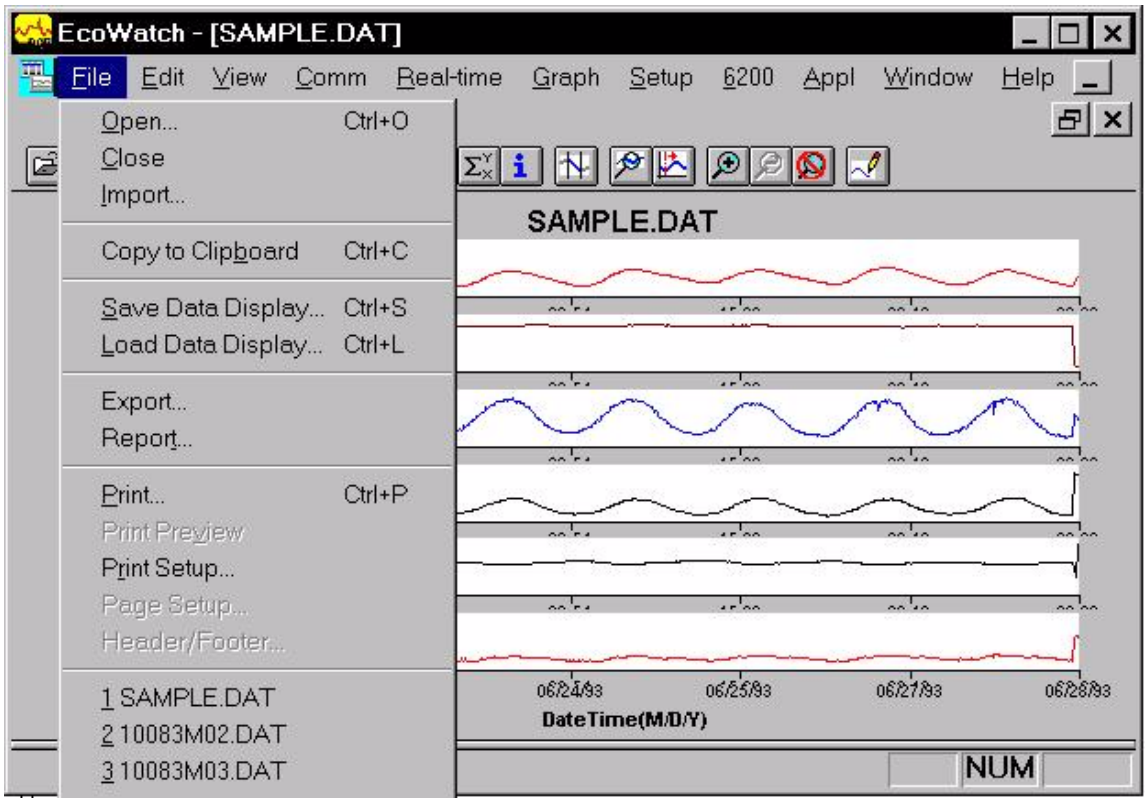

Figure 8.9 Saving, Exporting, Printing and Related Functions

8.7 Example of Customizing a Subset of SAMPLE.DAT

Using SAMPLE.DAT we decided that some of the data were not of particular interest, so using top line menu item Setup, then Parameters, then Add/Remove.., we removed ORP and Depth results from the data set (see figure 8.10). Note that we have not deleted this information from the file, but rather we are choosing not to display it. You can always return to this function and add original data back. Under the same Parameters function, we have selected Attributes… and changed the
Average Interval from the default 0 to 60. Since data was collected every 15 minutes, the change to a 60 minute interval helps to smooth out the graph and average out any short term "noise" events.

Next, we again select Setup, then Graph. From the functions available, we first selected Title Page… and typed in a name (Clear Lake Study #2) and below that we typed the parameters that are shown in the graph. Just below Title Page…, we clicked on 2 Traces per Graph. This combines adjacent parameters which is sometimes useful in parameter and event evaluation. For example, in the second graph shown in Figure 8.10 below, you see that DO concentration and pH seem to track rather closely and change in a diurnal rhythm. In actuality, when DO levels drop in a natural body of water, CO_2 often builds up forming carbonic acid which leads to lower pH

readings. DO rises again during the day due to photosynthesis, CO_2 then falls and pH increases again.

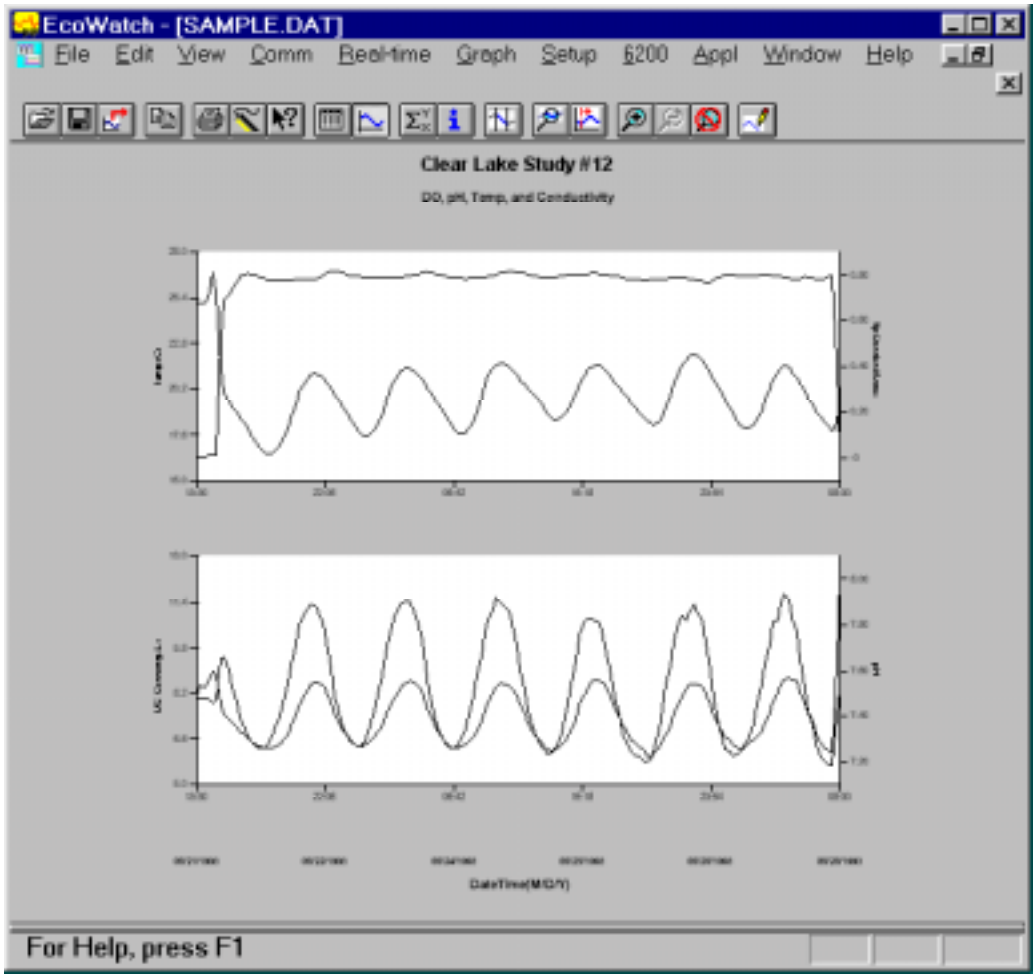

Figure 8.10 Customizing a Graph from SAMPLE.DAT

As you become more familiar with EcoWatch DCP, the plotting, analysis and reporting functions can be accomplished easily and quickly. Practice with all of the functions and, again, do not forget to use Window's Help for more detail.

Section 9
Maintaining and Troubleshooting the System

9.1 Introduction

This section outlines the care and maintenance that your 6200 DAS will require. The troubleshooting section outlines the basic procedures that we recommend you perform before contacting your dealer. The following paragraphs and tables should be helpful in identifying the cause of possible problems that may occur during initial setup and or during normal operation. The tables are divided into four columns marked symptoms, possible cause, action and reference. Your problem may not be identical to any of the symptoms described, however, there may be some similarities which will help in determining a conclusion.

9.2 Routine Care and Maintenance

The 6200 systems are built to withstand adverse environments for prolonged periods of time, however, some maintenance is periodically required to maintain the system's peak performance.

If the initial installation is substandard, then all our work is in vain and the system will fail prematurely. As with anything else, common sense and paying attention to the minor details of the system during the first installation will help your system prevail. Just because we did not supply a roll of electrical tape or tie wraps does not mean that you should not procure a roll yourself. Applying one or two layers of tape to a connector that looks vulnerable, or securing cable that is flapping in the breeze will help to make your system last. An experienced field technician should automatically know when there is need for that extra hardening step that will prevent a premature failure.

As for regular inspection or maintenance, the customer/user should start a logbook during the installation. The logbook should be used to log any pertinent information about the system operation. At the same time an inspection schedule should be established. We supply a general sheet to give you an idea of how to do it. The inspection routine should be more frequent in the beginning and then decreased once a routine is established.

Sensors

All of the sensors used are made specifically for outdoors. They incorporate quality parts built to operate continuously for many years; however, the life of a sensor will vary depending on how adverse the weather conditions are at each site. Each sensor is different. Some may need frequent cleaning and calibration, such as the YSI sondes, while others may only need cleaning every year, with no calibration at all, such as the Met suite.

Meteorological (Met) Suite

This Met suite consists of the Wind speed and direction sensor, the temperature thermistor and Relative Humidity sensor are mounted to the sensor mount pod. The sensor mount also serves as a junction box.

Wind Speed/Direction

This sensor requires very little maintenance, however, it does incorporate moving parts which will eventually wear out. A more detailed maintenance section is provided in the manufacturers' instructions manual. Inspect the sensor body for physical damage or loose parts such as the anemometer blade or the sensor mount. Clean unit with mild soap and water as necessary.

Temperature sensor

The temperature/RH combination sensor is protected within the aspiration shield and is difficult to inspect. Look for obstructions within the aspiration shields that will prevent normal air circulation. A free flow of air through the aspiration shields is important for an accurate temperature reading. Small insects or bugs might find this sort of contraption suitable to build the ultimate residence. Insure that the sensor membrane filter/ mechanical housing, which protects the sensing elements from dust and dirt, is intact. Replace this membrane as required. Use low pressure air to blow out any foreign materials. If this does not work, you will have to disassemble the aspiration shields. Do not spray high pressure water between the aspiration shields, this will cause damage to the integrated sensor.

Relative Humidity

Follow the same precautions as the temperature sensor.

Pyranometer

Insure this sensor is unobstructed and mounted level. Inspect it periodically and clean the sensor surface, you might have to use a damp towel to remove dirt or dust from the teflon lens, then wipe it dry.

Barometer

The barometer sensor is built into the 6200 electronics, thus, it is protected from the elements. The Barometer vent tube exits out the 6200 enclosure. The vent tube must remain unobstructed. In cold environment applications, precautions must be taken to prevent the vent tube from freezing. Clean out the rubber boot that shields that vent tube from ice. Do not spray high pressure water up into the barometer vent tube.

Rain Gauge

The rain gauge should be checked to be sure no creature has decided to make it a home. The mounting needs to be secure and level so that the water can easily flow thru the tipping bucket. This sensor requires very little maintenance, however, it does incorporate moving parts which will eventually wear out. A more detailed maintenance section is provided in the manufactures instructions manual. Inspect the sensor body for physical damage or loose parts. Clean unit with mild soap and water as necessary.

Sondes

The YSI sondes have an extensive manufacturers operational manual that details the specific maintenance procedures needed. Please refer to the appropriate maintenance section in your user manual.

Power

The system operates from a 12 volt DC battery. In the event the main source of power fails or some how gets disconnected, the, fully charge battery will provide backup power for over 10 days at a 15 minute sample rate. If the sampling rate is increased, more power will be used, thus, the reserve days will decrease. The external source can be from a solar panel(s), AC power, 110 V~ or 220 V~, or from an external 12 to 16 volt power supply, or an external larger capacity battery. The battery power is automatically monitored by the 6200 data logger and stored in memory as a parameter, this parameter is uploaded with the normal data sample to the base station. If the voltage drops dangerously low and no one takes notice, the logger will stop logging and eventually someone will take notice. This cutoff voltage is 10.6VDC.

Battery changes

The lead acid batteries follow the same operating principle as any lead acid battery found in most cars. If they are allowed to go below 10.5 volts DC, they are basically dead and damaged. The charge recovery depends largely on the length of time the battery was discharged, however, because these are not deep cycle configuration batteries, any full discharge will prevent the battery from ever achieving 100% charge potential again.

The battery provided is a lead acid, sealed type battery requiring very little maintenance. These types of batteries should last over five years of continuos operation. Pay close attention to the battery terminals for signs of corrosion, which could indicate overcharge conditions, or excessive moisture within the electronics enclosure. A corrosion inhibitor spray or paste may be used on the terminals to prevent damage.

A battery change can be accomplished in a couple of minutes, in most cases the procedure can be performed between samples eliminating any data loss. Disconnect the 2-pin solar panel terminal strip (the green connector located next to the COM port). If the unit is AC powered, unplug the AC cord from the panel, then disconnect the battery and replace it with a new one.

Solar panels

Solar panels may vary in size to suit different application, as some areas receive less energy from the sun than others. All panels must be oriented properly, toward the peak sun hour, typically due south at a angle depending on the latitude of the installation. For peak output clean the solar panel surface on a regular basis. It doesn’t take much dust or dirt accumulation to drop the solar panel output 20 to 30%. Insure all solar panel brackets and clamps are secure.

Cables

The 6200 system interface cables come in all different shapes and sizes. In most cases they have a UV stable jacket insulator suitable for outdoor environments. Insure that they are secure with tape, tie wraps, or wall anchors. Be sure to provide ample radius bends, and avoid sharp kinks which will stretch and eventually breakdown the jacket insulator.

Connectors

All the connectors used in the 6200 are high quality and splash proof. Take extra precaution in treating the threads with a small amount of silicone lubricant and then

cover the connector with a connector boot or electrical tape. Always insure that water drops will drip away from the connector and not towards it. Periodically disconnect the cables and check both connectors for signs of corrosion.

DCP Enclosure

The enclosure is NEMA4X rated which will withstand splashing water. Inspect the door seal for signs of deterioration or cracking, if a cable gland is not used, plug the hole. Clean the door seal as required, and check the enclosure for damage. The desiccant inside the enclosure has an indicator on it to signal when it needs to be changed out. Replace with new desiccant as required.

Grounding

Proper grounding will afford some assurance of survivability in a near-by lightning strike. A good ground system also assures the equipment is not floating at some high dangerous voltage potential. The grounding wire leading from the enclosure ground lug to the ground rod must take the most direct route possible. Always use #8 or heavier AWG copper wire. One or two AWG heavier aluminum wire is also permitted. Insure ground connections are secure, replace ground wire or ground rod as needed.

Antennas

The antennas provided are normally tailored for the application, therefore, an antenna for one site might be totally different from another site. One site might be quite far from the base station and thus require a directional antenna with substantial gain. The base station may have to cover a wide pattern of sites geographically scattered throughout a quadrant or even throughout all four quadrants of the compass rose, thus, an Omni antenna with gain may be required. Directional antennas provide better coverage towards one particular point, but have more cross sectional surface which makes them more susceptible to damage from high winds. Omni antennas are very durable with little cross-area.

Always insure that all ground plane elements and vertical element are secure. The connector should be protected with a coax connector boot, or by two to three wraps of electrical tape. Directional antennas (yagy) may require some assembly. Follow the manufacturers assembly instructions carefully. If you are not certain, call the antenna manufacturer. The antenna once assembled and mounted, will have the elements vertical in reference to earth, not horizontally like a TV antenna. Each element is perfectly in line with each other and perpendicular to the antenna boom. The element with the gamma feed, where the coax cable connector attaches, needs to point straight up. Always lubricate the gamma feed connector threads with a little bit of silicone grease and then wrap the connector with one or two layers of good quality electrical tape, a slight drip loop on the cable leading away from the connector will insure that water drips away from the connector and not towards it. Secure the RF coax cable along boom and antenna post.

Each antenna site inspection should take into account the above mentioned. Insure that all antenna elements, cables, and connectors look secure and undamaged. The antenna elements, Omni or yagy should never be in contact with another antenna element, building wall surface or tower. Above all stay away from high tension power lines.

9.3 Troubleshooting

In order to solve just about any problem that might arise with the 6200DCP, one must have a basic understanding about computers in general, the Windows platform, YSI's EcoWatch for Windows program and some basic electronics knowledge.

Some 6200DCP applications are very simple, such as a direct point to point connection, others systems may involve regular or cellular telephone modems, others will involve RF telemetry and some systems may involve one or two communication techniques at the same time.

When a problem arises, try to isolate it by testing parts of the system independently. The major subsystems are provided with instruction manuals. You should review these manuals to familiarize yourself with each part of the system and its capabilities, before tackling the overall system. The YSI sonde manuals cover all aspects of operation, communication modes and trouble-shooting guide. The Met sensor manual also includes operational and maintenance information, as does the 6200 DCP. EcoWatch DCP has a very good help menu with annotation capabilities.

All systems are configured and tested at the factory. However, we still recommend that you setup the equipment prior to the final installation, as a dry run often brings forward unforeseen difficulties. Most of these problems can be corrected quickly, such as lost or missing parts, damage from shipping, etc. The overall benefit of setting up the system early is that it forces one to become much more familiar with the system.

Basic Equipment:

All applications	DVM, portable type, Fluke 7x, 8x or 9x, series are good reliable easy to use digital voltmeters. Medium flat blade screw driver, electrical tape, silicone grease.
Telemetry	Radio scanner, for monitoring telemetry applications, nothing fancy, available from local electronics supplier.
Cellular	Hand set for the cellular modem, allows voice connections during installation or troubleshooting, very helpful during installations.

6200 DCP

The first method to recover a lost 6200 DCP system is to use the AutoConfig function. This will result in the loss of data that has already been collected; however, it will check all sensors, re-program, and reset the system.

The 6200 DCP contains the circuit board that collects all of the data and the communication methods. This circuit has an EEPROM that is programmed by EcoWatch DCP to carry out it's tasks. Generally, every time a change is made with EcoWatch, the 6200 DCP is re-programmed completely and re-booted. The COM port located inside the enclosure will take priority over any other communication or task that the 6200 DCP is doing. To check out the field station, load a laptop with EcoWatch and transfer the configuration files from the base station to the laptop. This is done by backing up the configuration to disk, then restoring that configuration from disk to the laptop. You will then have a configuration that is ready to talk to the field station.

At the field station, connect with a straight thru RS-232 cable (provided). In EcoWatch, switch to Direct, and use the Interrogate Now function. You should hear a small click from the 6200 DCP as it switches over to communicate thru the front panel COM port.

SYMPTOMS	POSSIBLE CAUSE	ACTION	REF
6200 DCP does not respond	Depleted battery	Check battery voltage, replace battery if necessary. 11.7 VDC is needed for boot-up.	4.3
	Program is looping	Remove power for 5 seconds, then re-apply. You should hear a beep for about 5 seconds at boot-up.	4.3
	Wrong COM port on laptop	Change as necessary.	2
	Corrupted configuration file	AutoConfig to reset the program in the 6200 DCP (6200:AutoConfig). If this does not work, begin a New file.	7.6
	Check communication method	Refer to communication section below.	6.6
6200 DCP is giving bad data	Program has changed	AutoConfig to reset program in 6200 DCP (6200:AutoConfig)	7.6
	Check sensors	A sensor may be disconnected or fouled and needs maintenance.	5
	RF influencing Sondes	Be sure Sonde cables are not run near other power lines. Shield if necessary	7.2
	Conflicting configurations	If more than one base station communicates with 6200 DCP, they must all have the same config files.	6.6
6200 DCP Continuously beeps	Program is lost	Connect to computer with EcoWatch DCP and use 6200:Advanced: Program Now function. AutoConfig after to be sure program is correct.	7.6

Checking Bit Alarms

The 6200 DCP records BIT flags as a parameter in the internal sensors file. You can use EcoWatch DCP to view these flags by opening the internal sensors file (with the i in the 6th position) then selecting Setup:Parameters:Add/Remove and selecting BIT Alarm.

Alarm processes

Many of the alarm processes have both process outputs (a status value of 1 or 0) and digital outputs (high or low). The precise timing of when these outputs are set high (1) or low (0) differs slightly.

Except where otherwise stated, digital outputs are set high or low immediately as the process inputs enter or leave the alarm state; and only when the process inputs enter or leave the alarm state. Thus, if the alarm reset process (or any other process) is used to set a high digital output to the low state, it will not go high again until the alarm state is left and re-entered.

The numerical process output (0 or 1) is set to 1 the first time that the process is called with the inputs in the alarm state. The process output remains at 1 until the end of the sample interval time. This means that if the alarm is set and the re-set within a sample interval time, the process output will be 0 until the alarm is first set; 1 from that point until the end of the sample interval; and 0 from the start of the next sample interval. The reason for this is that the output message will always notify the user that an alarm has occurred within the sample interval.

1 Built-In-Test (BIT)

Inputs	none	
Outputs	1	The bit-weighted result of all bit flags set by ZENO®-3200 internal procedures or by special user processes. The output is formatted and printed as a hexadecimal value.

Various system functions or user processes are used to set bit flags in a global BIT value. Up to 31 bits can be assigned in the global BIT value (the 32nd bit is used internally by the ZENO, and is not accessible to the user). This process reads and then clears the global BIT value.

The BIT Alarms can be interpreted as follows: The Hex column refers to the last two digits of the BIT Alarm.

Flag #	Binary	Hex	Description
1	00000001	01	System reset.
2	00000010	02	Real-time clock suspect.
3	00000100	04	Data logging memory initialized.
4	00001000	08	Serial device communication failure.
5	00010000	10	EEPROM suspect.
6	00100000	20	18-bit analog to digital converter suspect.
7	01000000	40	12-bit analog to digital converter suspect.
8	10000000	80	Clock adjustment made due to temperature compensation.

All of the above bit flags are logically ANDed together. For example, whenever the system resets the BIT Alarm will be 01. If a serial devise like a sonde is disconnected when it is supposed to be there the BIT Alarm will be an 08. If the system is reset and there is a serial device error then the BIT Alarm will be 09 (01+08). If the 18-bit A-to-D converter is suspect and the system resets, you would get a 21 (20+01).

Sensors

Since all sensors are excited separately, it is possible to have some sensors working while others are not, in some cases the data pattern could be indicative of the problem, in other circumstances its hard to tell. A bad sensor output might show up as noisy or continuously stable, never changing. Noisy data, particularly if it occurs in cycles could mean moisture getting into the cable wires or connector pins. A continuos stable output usually indicates a permanent open or short circuit, wire break or failure.

Meteorological (MET) Suite

In order for the EcoWatch DCP 6200 auto configuration to work, the wind speed, direction, temperature and RH cable/connector must be mated to the 6200 DCP, When the connector is engaged, it provides a loop back called the "HELLO" signal on pin L. All the sensors have separate excitation voltages, except for the wind speed sensor, which generates a sine wave frequency output proportional to the anemometer rotation.

SYMPTOMS	POSSIBLE CAUSE	ACTION	REF
MET During setup, the Met suite is not detected by EcoWatch 6200 configuration wizard	Hello signal not detected.	Disconnect the Met suite connector from the 6200, use a multimeter or DVM to check the 6200 MET connector. Pin M to L. Pin L should measure 3.5 volts dc or higher in reference to ground or pin M. If voltage is not present, the 6200 DCP will not detect the Met sensors. Return unit to factory.	5.2
	The 6200 Met suite connector hello signal is present on pin L.	Check the Met suite cable/connector for continuity between pin M to L, it should be 0 ohms. Return unit to factory	5.2
	The Met suite connector Hello pins indicate 0 ohms	6200 DCP electronics input digital port damaged. Return 6200 DCP to factory.	5.2
No wind speed indicated	Damaged sensor or 6200 DCP input channel.	Check sensor cable/connector pin D to E for frequency output when the anemometer is spun, if no output, check the manufacturers service manual. The output frequency when spun by hand will be about 2 to 20 Hz	5.2
	Sensor outputs a frequency	6200 DCP electronics input channel damaged. Return the 6200 DCP to factory	5.2

No wind direction or noisy output indicated. Note: There is no wind direction without wind speed first. Note: The 6200 DCP does not average readings. It will take a reading according to the time stamp on the data.	Damaged sensor or 6200 DCP input channel.	Check sensor cable/connector pin A to B, it should read 10K ohms, A to C or C to B will vary between 0 and 10 kohms, as vane is rotated. Check manufacture service manual for more information. If potentiometer is damaged return unit to factory.	5.2
	Sensor potentiometer and wiper is within specification.	Check MET connector pin A for excitation voltage. If excitation voltage is not present return unit to factory. If excitation voltage is present, jump A to B, reading should be full scale (360 degrees), then jump C to B, reading should be 0 degrees. If these readings are true, then the problem points to the wind speed sensor.	5.2
No air temperature Displayed	Damaged sensor or 6200 DCP input channel	Check MET connector pin G for excitation voltage, 2.5 volts DC pulses. If excitation voltage is present, jump F to G, reading should be full scale (1.0 units), then jump F to M for minimum range scale (0) If excitation voltage is not present return unit to factory	5.2
	If excitation voltage is present, but still no temperature data	Replace temperature /RH module Check manufacturers replacement instruction and Met5 suite disassembly.	5.2
No RH data displayed	Damaged sensor or 6200 DCP input channel	Check MET connector pin K for excitation voltage. If excitation voltage is present, jump K to J, the reading should be full scale (100RH units), then jump J to H for minimum range. If the excitation voltage is not present return unit to the factory.	5.2
	If excitation voltage is present, but no temperature data	Replace temperature /RH module. Same procedure as with the air temperature sensor.	5.2

Barometer

The barometer sensor is mounted within the 6200 DCP, it is vented to the outside via a small tube right next to the antenna connector.

SYMPTOMS	POSSIBLE CAUSE	ACTION	REF
Barometer During setup the Barometer sensor is not detected by the EcoWatch 6200 configuration wizard	Hello signal not present	Disconnect the barometer cable from the 6200 DCP interface board. Use a multimeter or DVM to check the barometer connector. Pin 5 to 6. Pin 5 should measure 3.5 volts DC or higher in reference to ground or pin 6. If voltage is not present, the 6200 DCP will not detect the barometer. Return unit to factory.	5
	The barometer connector hello signal is present on pin 5.	Check the barometer cable/connector for continuity between pin 5 to 6, it should be 0 ohms Return unit to factory	5
	The barometer connector Hello pins indicate 0 ohms	6200 DCP electronics input digital port damaged. Return 6200 DCP to factory.	5
No barometric pressure displayed	Excitation voltage is present and hello loop is OK	Replace or return Barometer to the factory	5
For accurate data from the solar radiation sensor a coefficient entry is required during the configuration wizard.			

Solar Radiation

The Pyranometer is connected through its own connection on the bottom of the 6200 DCP. It generates a small signal based on solar radiation.

SYMPTOMS	POSSIBLE CAUSE	ACTION	REF
Solar Radiation During setup the Pyranometer sensor is not detected by the EcoWatch 6200 configuration wizard	Hello signal is not present	Disconnect the sensor cable from the 6200, use a multimeter or DVM to check the Solar connector, pin A to B The voltage should be 3.5 VDC or greater.	5.4
	Hello signal is present, but sensor is still not detected.	Check pins A to B for 0 ohms continuity. If it is open return unit to factory.	5.4

No solar radiation data displayed	Use DVM to measure miliVolts output directly on pin A to C. Under a fluorescent light you should read 200 to 300 miliVolts.	If sensor has no output under fluorescent or sun light. Return unit to factory	5.4

Rain Gauge

The Rain Gauge is connected through its own connection on the bottom of the 6200 DCP. In order for EcoWatch 6200 auto configuration to work, the rain gauge sensor cable connector has to be mated to the 6200 DCP. This connection activates the "HELLO" signal on pin C.
The output pulses occur each time the sensor bucket tips, these pulses are present on pin A.
Shorting pins A to B with a jumper simulates the rain sensor output.

SYMPTOMS	POSSIBLE CAUSE	ACTION	REF
During setup, the rain gauge is not detected by the EcoWatch 6200 configuration wizard	Hello signal is not present	Disconnect the rain gauge cable from the 6200, use a multimeter or DVM to check the 6200 rain gauge connector. Pin C to D should be 3.5 VDC or greater.	5.3
Rain gauge was detected, but there is no output	The 6200 rain gauge connector hello signal (5VDC)is present on pin C.	Check the rain gauge connector for continuity between pins C and D.	5.3
	Tilt bucket assembly inoperative, or electromechanical switch inside rain gauge is defective	Disconnect the rain gauge cable from the 6200 and perform a continuity test from pin B to A. These pins should indicate open circuit, move the tilt bucket to the other side, the continuity test should indicate a brief short (0 ohms) and return to open.	5.3
	If rain gauge works on another system.	6200 electronics damaged, return to factory.	5.3

Sondes

The YSI sondes are detected in a different manner from the other sensors. EcoWatch instructs the 6200 DCP to scan and identify any SDI-12 device connected to the SDI-12 bus/port. As each device is found the 6200 records the sondes' setup information. This information is then used by the 6200 DCP to create a configuration file. This file is then used to program the 6200 DCP sensor, process and output settings automatically.

SYMPTOMS	POSSIBLE CAUSE	ACTION	REF
EcoWatch Config wizard unable to detect sondes attached to the 6200 DCP	The sonde SDI12 address is not 0-9 or A-F	Connect the sonde to a terminal emulator and verify the SDI-12 address. See sonde manual for instructions on how to set the SDI-12 address.	3.4
	The configuration in the 6200 DCP and EcoWatch has changed	AutoConfig the 6200 DCP to establish a new valid configuration.	6.6
EcoWatch DCP detected the sondes but no data is posted	No 12VDC present to power sonde	Disconnect the sonde from the 6200, use a multimeter or DVM to check Sonde Connector pins B to A for 12VDC.	4
	Sonde field cable is damaged	Perform continuity test on field cable, Check sonde manual for cable diagram.	3
	Extremely long sampling period entered in the 6200 system setup	Change sample rate to a shorter period.	6.6
EcoWatch DCP reports -1,000,000 as data.	Sonde is disconnected or not giving data	Check the sonde connection, SDI-12 address and communication configuration.	3.4
For further sonde diagnostic testing, connect a terminal emulator directly to the 6200DCP, access the USER menu, select the Test menu and then use the SDI-12 passthrough test commands. *CAUTION: Once done, don't forget to enter CONTROL Z to escape.*			

Power

The 6200 DCP will shut off at a voltage of 10.6VDC. It will then need at least 11.7 VDC to start up again. This is done to protect the battery from a full discharge. Under normal conditions the battery should remain fully charged.

SYMPTOMS	POSSIBLE CAUSE	ACTION	REF
No DC Voltage	Fuse blown	Replace fuse	4
	Depleted battery	Determine what caused the battery depletion.	4.3
	Defective Battery	Check for 12.5 VDC. Replace battery if necessary.	4.3

Solar panels not charging battery	Bad solar panel	Check solar panel with no load voltage, typically 20 VDC in direct sun. Insert the DVM (in current mode) in series with one of the solar panel leads, you can use either lead, positive or negative to measure the solar panel output current.	4.5
	Bad cable or connector problems	Find break or damaged wire or connector and repair or replace it	4.5
Solar panels degrade overtime, typically 5 % of full output every 10 years.			
No AC voltage	Tripped circuit breaker or burned fuse	Check circuit breaker and or replace fuse	4.4
	Damaged AC power cord	Replace power cord	4.4
	No line power	Check voltage of line power	4.4

Direct Communication

Use any RS232 serial 9 pin to 9-pin interface cable, one cable is provided with the system.

SYMPTOMS	POSSIBLE CAUSE	ACTION	REF
Direct connection 6200 DCP will not respond to base station computer	Depleted battery	Check battery voltage, replace battery if necessary.	6.2
	Serial interface cable disconnected,	Check interface cable.	6.2
	Wrong baud rate	Set baud rate	2
	Program routed to a different communication port,	Verify program port settings	6.6
	6200 DCP ID number has changed.	Make a New 6200 configuration.	7

Phone modem Communication

The phone modem is set to factory default profile.

SYMPTOMS	POSSIBLE CAUSE	ACTION	REF
Phone modem 6200 DCP will not respond to the base station modem	Depleted battery	Check battery voltage, replace battery if necessary.	4.3
	Damaged modem at base station or corrupted modem profile	Check with another modem, use terminal emulator to check modem profile	4.4
	Damaged modem at site or corrupted modem profile	Visit site, verify 6200 DCP is operational, and observe that modem LED turns on during an incoming call. If LED never turns on, then modem is inoperative or phone line is damaged. Test line with another phone. If the phone line is OK, replace the modem.	4.4
Modem connects, no data or 6200 DCP user screen displayed	6200 DCP modem port control pins not detecting the ring, thus, the 6200DCP can not strobe the power to the modem.	6200 DCP interface board damaged, return to factory	4.4

Cellular modem Communication

Only one change is necessary to the cellular active profile, change the S0 register to =2, this value will force the phone to auto answer on the second ring.

SYMPTOMS	POSSIBLE CAUSE	ACTION	REF
Cellular modem 6200 DCP will not respond to the base station modem	Depleted battery	Check battery voltage, replace if necessary	4.3
	Damaged modem at base station or corrupted modem profile	Check with another modem, use terminal emulator to check modem profile	6.5
	Cellular provider is off line	Contact provider and ask if they are experiencing overload traffic problems	6.5
	Damaged modem at site or corrupted modem profile	Visit site, verify 6200 DCP is operational, if available, use a cellular handset to accept a voice call. If call does not make it through, check modem active profile, signal strength, signal quality, consult with cellular modem for commands. If call comes through and the voice is clear, the problem is probably with the 6200 DCP. Return unit to the factory.	6.6
	Cell power timing window doesn't match EcoWatch	Daylight savings time may have shifted the Base station. Either turn off daylight savings or go to field station with laptop and synchronize clocks.	6.6

Radio Communication

Caution: Any type of RF work requires a certified technician/engineer.
Never use more RF power then required.

The RF transceiver is used "as is" from the factory. The simplex communication always starts at the base station to the site(s). Because each base transmission packet contains site ID information, only one site at a time will respond. If two sites inadvertently end up with the same ID number, there will be a communication conflict, where the strongest signal or closest site might win, in most cases the information just becomes gibberish to the base station and the packet is discarded. Interference may come from other sources as well. Remember that the FCC allows three customers per frequency in one general area.

SYMPTOMS	POSSIBLE CAUSE	ACTION	REF
RF connection 6200 DCP will not respond to the base station	Depleted battery at site.	Check battery voltage, replace if necessary	4.3
	Damaged base station transceiver, or problems with the serial interface connections	Check serial connection, verify transceiver is operational, and use scanner to monitor the operating frequency. If the tones sound raspy or noisy then monitor the RF information packet. The tones should sound clear, not raspy.	6.3
	Damaged base station RF cable or antenna, RF connector corroded.	Check RF cables and base antenna, repair or replace as needed.	6.3
	Site is out of range.	Check for line of site, too great a distance between sites, obstructions, such as wet foliage in the summer time. Call factory for suggestions.	6.3
	Site antenna or cable damage	Visit site, verify 6200 DCP is operational. Check RF cables and base antenna, repair or replace as needed.	6.3

Appendix A
Component Descriptions and Specifications

6076 EcoWatch DCP™

Description...
EcoWatch DCP™ is a Window's-based software program specifically written to control and manage 6200 DCP.

Features...
Windows-based graphical users interface
Real-time link to field stations
Autoconfiguration of meteorological and water quality sensors
Two-way communication between field and base stations
Data review with plots, reports and statistical information
Exportable data to other Windows-based applications
Upgradable to accommodate additional sensors and instruments

Specifications...

Media
2 x 1.44 MB disks

Platforms
Windows® 3.1 or 3.11
Windows 95®
Windows NT®

Computer Hardware Requirements

Minimum	PC 386, 4 MB RAM, 4MB hard disk space, COM port
Recommended	PC 486DX or higher, 8 MB RAM, 4 MB hard disk space, 2 COM ports and bus mouse.

General
GUI standard Windows interface
Allows user to set up, communicate with, and support their 6200 DCP
Data files exportable to universal comma delimited file (CDF)
Maintains a configuration file of each 6200 profile (allows total reconstruction in case of failure)
Easy and friendly interface with all YSI sensors and a variety of meteorological sensors

6200 Data Collection Platform

Description...

The 6200 DCP is a field station designed to collect environmental data (meteorological and water quality) and to transmit these data via radio, phone modem, cellular modem or direct line to a base station. The field station is powered by a 12 vdc battery, trickled charged by solar panel or AC charger. At the base station, PC-based EcoWatch DCP™ software provides a user-friendly interface that serves to set up, configure, communicate, display and report the field data. The 6200 DCP contains 8 KB of logging memory. Memory options include part 6201 (200 KB logging memory) and 6202 (944 KB logging memory).

Features...

Fiberglass enclosure with hinged door and 2 lockable side latches
Enclosure flange with 4 holes for easy mounting
All connectors mounted on bottom for additional weather protection
All sensor connectors are military spec (MS) with tethered weather caps
Predrilled holes for 1/2” gland seals or conduit fittings (delivered with NEMA rated plugs)
Easy battery replacement (no tools required)
Easy access to analog, digital and power terminals for adding additional sensors
Easy access to AC receptacle, phone plug, solar power connector and serial port
Easy replacement of desiccant using convenient container
Easy access for service technician to main circuit boards, power supply and comm hardware

Specifications...

Environmental

Enclosure, NEMA 4X
Operating Temperature -40 to +60°C [-40 to 140 °F]
Operating Humidity 0 to 100% RH, non-condensing

Physical

Size 13w x 15h x 6d inches [33 x 38 x 15.2 cm]
Weight 17 lb [8 kg]

continued...

DCP Electronics

Motorola 68332 32-bit microcontroller, 16 MHz
64 KB Memory, 8KB Logging Memory is standard (200 KB and 944 KB memory options)
10 single-ended analog inputs (5 differential), 18 bit resolution, 1 sample/sec, with
10 ranges, ±0.005 to ±5 VDC, gain and attenuation is software programmable
3 configurable digital input/ouput channels
2 switched excitation outputs of 1.25, 2.5, 5.0 V~, 100 mA, software programmable
2 switched power outputs, 5 VDC (200 mA) and 12 VDC (700 mA)
Power management software (hardware watchdog timer and power monitor)
Real-time, battery-backed clock
EMI and ESD protection
Full serial I/O port
Accommodates up to 16 SDI-12 devices
Enhanced SDI-12 interface with up to 36 parameters from single SDI-12 sensor

Power Options

A. 12 VDC, 12 Ah Lead Acid Battery
Capable of powering 6200 DCP equipped with 2 watt radio, complete MET sensor suite, and one 6-series sonde for 11 days at a sample and transmission frequency of every 15 minutes and sensor warm-up no greater than one minute.

B. 12 VDC, 12 Ah Lead Acid Battery with 100/120/220/240 V~ charger

C. 12 VDC, 12 Ah Lead Acid Battery with 10 watt Solar Battery Charger

Communication Options

A. Direct Link, RS-232 serial interface
Easy access to DB-9 connector mounted inside NEMA enclosure
Sealed feed-through or conduit fitting port on bottom of enclosure

B. Radio, 2 watt (no FCC license required), 467.8 MHz

C. Telephone Modem, 14,400 baud (forced to 9600 bps by 6200)

D. Cellular Modem, 1200 or 2400 baud (forced to 1200 bps by 6200)

Memory Options

6201 Factory-installed option for additional logging memory
256 KB total, 56 KB running memory, 200 KB logging memory
2 x 128KB x 8 SRAM, 70 ns

6202 Factory-installed option for additional logging memory
1 MB total, 56 KB running memory, 944 KB logging memory
2 x 512KB x 8 SRAM, 85 ns

Warranty

3 years on basic DCP, including Power Supply
1 year on Battery
1 year on Memory Options

6205 Terminal Block Transient Protection

Description...

The standard 6200 DCP has full isolation and lightning protection on all external connections and standard internals such as telephone connection, DB-9 RS-232 communications port and solar charger. The 6205 factory-installed option provides full isolation and lightning protection on the expansion terminal block, which is not protected on the standard unit.

Features...

Complete isolation and lightning protection on the terminal block
Protection (factory-installed) includes 10 gas tubes and 8 TVS devices

Warranty

1 year

6213/6219 MET Sensor Suite

Description...

The MET sensor suite provides instantaneous measurement of wind speed, wind direction, relative humidity and air temperature. It is designed as one multi-sensor unit with a single interface cable that has strain relief at the sensor. The cable terminates in a 17 pin MS style connector. Two versions are available, P/N 6213 - 15 ft (4.6 m) and P/N 6219 - 45 ft (13.7 m).

Features...

Extremely rugged
Easy installation, maintenance and replacement
Wind monitor has helicoid propeller with a wind survival of 220 mph (100 m/s)
Relative humidity sensor uses cellulose-strain gauge technology
Air temperature sensor is the YSI 44018 thermilinear bead thermistor

Specifications...

Physical

Height overall	20 in [51 cm]
Length overall	22 in [56 cm], includes vane and propeller
Propeller diameter	7.1 in [18 cm]
Weight	2.2 lbs [1 kg]

Wind Speed Sensor (WS)		Wind Direction Sensor (WD)
Range	0-134 mph [60 m/s]	360° mechanical, 355° electrical
Survival	220 mph [100 m/s]	220 mph [100 m/s]
Threshold	2.2 mph [1.0 m/s]	2.2 mph [1.0 m/s]
Delay distance	n/a	4.3 ft [1.3 m]
Temperature range	-40°C to +40°C	-40°C to +40°C
Power draw	virtually none	virtually none
Signal output	sine wave, 90 Hz / 8.8 m/s	analog VDC from precision low-torque conductive plastic potentiometer

Relative Humidity Sensor (RH)

Accuracy	±4%
Range	1 - 100%
Temperature range	-40°C to 125°C

Air Temperature Sensor (AT)

Accuracy	±0.3°C
Temperature range	-40°C to 125°C

Warranty

1 year

6214 Pyranometer

Description...

The pyranometer (solar radiation sensor) features a silicon photovoltaic detector mounted in a fully cosine-corrected miniature head. The sensor comes with a 10 ft (3 m) cable terminating in a 5 pin MS connector. The detector is mounted to an aluminum base along with a bubble level. Mounting arm and bracket, P/N MAZ6253 may be purchased for tower mounting.

Features...

Global solar radiation
Durable photodiode
Error less than ±5%
A calibration certificate with a part-specific calibration constant is provided with each unit. The constant is entered during system configuration with EcoWatch DCP.

Specifications...

Physical

Size	0.9 (∅) x 1.0 in [2.38 (∅) x 2.54 cm]
Weight	1 oz [28 g]
Cable length	9.8 ft [3 m]

Measurement

Sensitivity	80 uA per 1000 W/m^2
Accuracy	Absolute error <5% (typical < 3%), under natural daylight conditions
Temperature drift	±0.15% per ^oC maximum
Impedance	147 ohms
Linearity	±1% for 0 to 3000 W/m^2

Warranty

1 year

6215 Rain Gauge

Description...

The rain gauge uses a tipping bucket mechanism. The mechanism is designed so that one tip of the bucket occurs for each 0.1 inch (0.1mm) of rainfall. A bubble level mounted to the base and 3 adjustment screws, along with a 15 ft (4.6 m) cable terminating in a 4-pin MS connector make the sensor easy to install.

Features...

Stainless steel, aluminum and plastic housing
3 leveling knobs and bubble level

Specifications...

Physical

Height	12 in [30 cm]
Receiving orifice diameter	8 in [20 cm], with screen protection
Cable length	50 ft [15 m], 2 conductor cable with 4-pin MS connector

Environmental

Temperature range	+32 - 140°F [0 to 60°C]

Performance

Resolution	0.01 in [0.1 mm]
Accuracy	±1% at 22 in [560 mm] per hour
Capacity	30 in [760 mm] per hour
Dry contact closure	min 50 milliseconds

Warranty

1 year

6216 Heated Rain Gauge

Description...

The rain gauge sensor consists of a gold anodized aluminum connector funnel with a knife edge that diverts the water to a tipping bucket mechanism. The mechanism is designed so that one tip of the bucket occurs for each 0.1 inch (0.1mm) of rainfall.

The aluminum housing is covered with a white baked enamel surface to withstand years of exposure to the environment. The rain gauge is supplied with a 15 ft (4.6 m) cable and 4-pin MS connector for user installation. The AC 7 ft (2 m) power cord connected to this sensor is not designed to directly connect to the 6200 field station. A separate AC connection must be arranged when heating applications are required. The power cord comes with a US standard 3-prong plug.

Features...

Heater (user provides separate power source)
Rugged aluminum housing

Specifications...

Physical

Height	10 in [25 cm]
Receiving orifice diameter	6 in [15 cm], with screen protection
Sensor cable length	15 ft [4.6 m], with 4-pin MS connector
Heater power cable length	7ft [2 m]

Environmental

Temperature range	-40 to 140°F [-40 to 60°C]
Relative humidity	0 to 100%

Performance

Resolution	0.01 in [0.1 mm]
Accuracy	±1% at 2 in [51 mm] per hour
Average switch closure time	135 msec
Max bounce settling time	0.75 msec
Max bounce closure time	0.25 msec
Max switch rating	30 VDC @ 2 A, 115 VDC @ 1 A

Warranty

1 year

6217 Barometer

Description...

The sensor is a monolithic piezo-resistive barometer pressure sensor with minimal temperature compensation. The barometer, with vent tubing, mounts inside the NEMA enclosure and requires no user installation. The vent tube vents to the bottom of the enclosure for minimum exposure to the weather. An ice boot offers protection from the formation of icicles.

Features...

Temperature and pressure compensating algorithms are used to provide accuracy specs

Specifications...

Physical

Factory-installed within the 6200 enclosure (no connections required by user)

Environmental

Temperature range	-40 to 185°F [-40 to 85°C]

Performance

Pressure range	18 to 32 inches [600 to 1100 mbar], [455 to 823 mm]
Resolution	0.01 in [0.1 mm]
Accuracy	±0.3% FS from -20 to 55°C [-4 to 130°F]
Supply voltage	10 VDC
Supply current	3 mA max
Output	0 to 5 VDC

Warranty

1 year

6221 Radio

Description...

The two-way radio telemetry package uses a programmable FM transceiver. The frequency shift keying (FSK) radio modem is mounted on the DCP main circuit board. Modulation meets CCITT v.32 specifications at 1200 baud. Signal lines include transmitted audio (TXA), receive audio (RXA) and push-to-talk (PPT, active low open protector). The radio is factory-installed in the 6200 DCP and the FSK modem is installed only on systems ordered with the radio option.

The separate base station radio (P/N 6250) incorporates both the radio and modem into a single package for use at the base station.

Features...

Simplex FM operation
No license required by end-user, standard unit is 2 watt, 467.8 MHz
Programmable frequency range for non-standard units, VHF or UHF
Note: Special order radio options available include 136 to 174 MHz and 400 to 430 MHz

Specifications...

Physical

Size	4.5 x 1.2 x 2.5 inches [11.4 x 3.0 x 6.4 cm]
Weight	8.9 oz [252 g]

Environmental

Temperature range	-22 to 121°F [-30 to 50°C]

General

Channels	11 (only one used with 6200 DCP)
Channel spacing	12.5 MHz
Supply voltage	10 - 15 VDC

continued...

Transmitter

Bandspread	15 MHz VHF
Frequency stability	5 ppm
RF power output	5 watt, programmable to 2 watt
RF output impedance	50 Ω
Modulation distortion	<4%
Duty cycle	50%
Transmitter attack time	14 ms maximum
Spurious and harmonics	-50 dBc maximum
FM hum and noise	43 dB
Modulation input impedance	100 KΩ @ both pins 1 and 8
Modulation response	@ Pin 1: 20 - 5000 Hz ±1.5 dB
Modulation response	@ Pin 8: Deviation limited with 3 KHz low pass filtered
Current drain	1500 mA @ 10 VDC at 5 watts, 800 mA @ 10 VDC at 2 watts

Receiver

Bandspread	15 MHz VHF, 20 MHz UHF
Frequency stability	5 ppm
Sensitivity	12 dB SINAD: 0.25 uV VHF, 0.3 uV UHF
RF input impedance	50 Ω
Selectivity	70 dB @ 30 KHz, 65 dB @ 25 KHz
Spurious and image rejection	50 dB
Intermodulation	65 dB
FM hum and noise	45 dB
Conducted spurious	-60 dBm VHF, -40 dBm UHF at RF connector
Receive current drain	65 mA VHF, 75 mA UHF
Receive attack time	<12 ms
Carrier attack detect time	13 ms @ 1 uV
RSSI attack time	<12 ms @ 1 uV
Audio distortion	< 3%
Audio output level	0 - 8 V p-p into 8Ω
Audio response	internally user selectable: flat, de-emphasized, high pass filtered

Warranty

1 year

6222 Telephone Modem

Description...

The modem is a standard Hayes-compatible modem, which can operate directly from 12 VDC battery power. (The wall socket adapter (if enclosed) is not used within the 6200 DCP enclosure.) The modem saves power by automatically entering sleep mode when it encounters five seconds of no activity. This option is factory-installed and factory-configured.

Features...

Auto-negotiation of highest mutually supported level of error detection
14,400 to 300 bps (within 6200 DCP, normally forced to 9600 bps)
Hayes-compatible command set
Auto-dial and auto-answer
US and Canadian approvals, FCC 68 and 15B, DOC, and safety

Specifications...

Physical

Size	1.1 x 2.3 x 4.8 inches [2.9 x 5.7 x 12.1 cm]
Weight	1 oz [30 g]

Environmental

Temperature range	-40 to 140°F [-40 to 60°C]

General

RS-232 Connector	DB-9 female
Phone Connector	3-pin (compatible with 6200 connector)
Power	12 - 15 mA sleep mode, 200 mA max at 12 VDC

Warranty

1 year

6223 Cellular Phone/Modem

Description...

The wireless phone modem uses the PSTN through the cellular telephone network. The modem communicates at 300, 600, 1200 or 2400 bps. Normally, the modem will be delivered operating at 1200 bps in the 6200 DCP. This option is factory-installed and factory-configured. The end-user provides their cellular number before shipment.

Features...

Full duplex wireless data transmission over cellular network
Bell 103, 212A or CCITT V.21, V.22 and V.22 bis compatible
Automatic speed matching to originating modem (normally forced to 1200 bps in 6200)
Originate or answer mode, including auto-answer
AT command set
Power switching circuitry is included on the interface board. This feature enables the cellular modem to completely shut down to save power.

Specifications...

Physical

Size	8.5 x 3.5 x 2 inches [21.6 x 8.9 x 5.1 cm]
Weight	2 lb [800 g]

Environmental

Temperature range	-40 to 140°F [-40 to 60°C]

General

RS-232 Connector	DB-9 female
Power	220 mA sleep mode, 2.5 A max at 12 VDC Receive power switched by DCP

Warranty

1 year

6240 AC Charger Power Option

Description...

This option is a constant voltage power supply with a current limiting feature. This option is factory-configured. If the AC charger is not present, the 3-prong AC socket inside the 6200 DCP is not present.

Features...

Fully automatic single-step front charging circuit
Charger circuitry has temperature compensation on the 6200 I/F board

Specifications...

Environmental

Temperature range	-40 to 140°F [-40 to 60°C]

General

AC main voltage is selectable	100/120//220/230-240 V~
Frequency	50/60 Hz
AC Fuse Type/Rating for 100/120 V~ operation:	Type 3AG (slow blow), 1.0 A @ 120 V
AC Fuse Type/Rating for 220/240 V~ operation:	5 x 20mm IEC127 (time delay), 0.5 A(T), 250 V
	Fuses may be purchased from any YSI Factory Service Center.

Warranty

3 years

6241 Solar Panel Power Option

Description...

The solar panel option is intended for use in applications requiring relatively low amounts of power. It is designed for use in nominal 12 VDC systems and rated at 10 watts peak power. The 30 ft (10 m) cable terminates in a 2 pin connector which plugs into the 6200 interface panel inside the NEMA enclosure. All installation brackets for the solar panels are included.

Features...

10 watt power
Cell strings laminated in EVA, Tedlar™ and tempered glass
Expected service life exceeds 20 years

Specifications...

Physical

Size	10.6 x 16.5 x 0.9 inches [26.9 x 42.0 x 2.3 cm]
Weight	3.3 lbs [1.5 kg]

Environmental

Temperature range	-40 to 194°F [-40 to 90°C]
Simulated wind loading	125 mph [57 m/s]
Humidity	repetitive freeze/thaw cycling at 85%
Hail (simulated impact)	1 in hail at 52 mph [25 mm at 24 m/s]

Electrical

Typical peak power	10 W
Voltage at peak power	17.5 V
Current at peak power	0.57 A
Short-circuit current	0.6 A
Open-circuit voltage	214 V
Coefficient of current	0.5 mA/°C
Coefficient of voltage	-72 mV/°C
Coefficient of power	-3.7%/°C

Warranty

1 year

6244 12 Ah Battery

Description..

This is intended as a replacement/spare of the 12 VDC, 12 Ah Lead Acid Battery used in the 6200 DCP.

Features...

Compact, Economical and Rugged
Recovers well from a deep discharge
Sealed lead acid battery - maintenance free
Polarized FASTON connection tabs

Specifications...

Physical

Size	8.4 x 2.8 x 5.5 inches [21.3 x 7.0 x 14.0 cm]
Weight	11 lbs [5 kg]

Environmental

Temperature range	-76 to 140°F [-60 to 60°C]

Electrical

Voltage	12 VDC
Capacity	12 Ah

Warranty

1 year

6250 Radio Base Station

Description..

The radio base station incorporates both the radio and the modem into a single package. The radio uses 2 watts of power. The frequency shift key (FSK) radio modem is mounted to the main circuit board. Modulation meets CCITT V.32 specifications at 1200 baud. Signal lines provided are transmitted audio (TXA), receive audio (RXA), and push-to-talk (PPT, active low open collector). A standard whip antenna and RS-232 cable are provided with the base station. Front-mounted LEDs show transmit and receive activity.

Features...

License provided for 2 watt, 467.8 MHz transmission
One base station can communicate with multiple 6200s in the field

Specifications...

Physical

Size	12.0 x 12.5 x 5.5 inches [30.5 x 31.8 x 14.0 cm]
Weight	8 lbs [4 kg]

Environmental

Temperature range	Indoor use

Electrical

Mains Voltage	120 V~, 60 Hz

Transmit/Receive Specifications

See P/N 6221 (Remote Radio) for complete set of specifications.

Warranty

1 year

6251 3-Meter Tower

Description..

The 6251 is a 3-meter tower is a portable steel tripod. Guy wires are provided for permanent installation on earth or gravel surfaces.

Features...

Lightweight
Rugged
Easy to install

Specifications...

Physical

Height	7.5 ft. [2.3 m]
Weight	16 lbs. [7.2 kg]

Warranty

1 year

6252 10-Meter Tower

Description..

The 6252 10-meter tower is a free standing aluminum tower. Universal Aluminum Tower sections are each about 10 ft (3.3 m) in length and use an equilateral triangular welded truss. The base is normally set in concrete and should be bolted to the bottom tower section to ensure correct equilateral spread of the base. The base should be leveled and the concrete should be allowed to set up for 3 to 4 days before erecting the remainder of tower.

Features...

Lightweight
Rugged
Easy to install

Specifications...

Physical

Maximum height	33 ft. [10 m]

Warranty

1 year

Appendix B
Required Notice

The Federal Communications Commission defines this product as a computing device and requires the following notice.

This equipment generates and uses radio frequency energy and if not installed and used properly, may cause interference to radio and television reception. It has been type tested and found to comply with the limits for a Class A or Class B computing device in accordance with the specification in Subpart J of Part 15 of FCC Rules, which are designed to provide reasonable protection against such interference in a residential installation. However, there is no guarantee that interference will not occur in a particular installation. If this equipment does cause interference to radio or television reception, which can be determined by turning the equipment off and on, the user is encouraged to try to correct the interference by one or more of the following measures:

- Reorient the receiving antenna
- Relocate the computer with respect to the receiver
- Move the computer away from the receiver
- Plug the computer into a different outlet so that the computer and receiver are on different branch circuits.

If necessary, the user should consult the dealer or an experienced radio/television technician for additional suggestions. The user may find the following booklet, prepared by the Federal Communications Commission, helpful: "How to Identify and Resolve Radio-TV Interference Problems". This booklet is available from the U.S. Government Printing Office, Washington, D.C. 20402, Stock No.0004-000-00345-4.

Appendix C
Warranty and Service Information

The YSI 6200 Data Acquisition System, including standard sensors and accessories, are warranted for one year from date of purchase by the end user against defects in materials and workmanship. The 6200 Data Collection Platform enclosure, wiring harness, CPU and Sensor Interface circuit boards are warranted for three years from the date of purchase against defects in materials and workmanship. Within the warranty period, YSI will repair or replace, at its sole discretion, free of charge, any product that YSI determines to be covered by this warranty.

To exercise this warranty, write or call your local YSI representative, or contact YSI Customer Service in Marion, Massachusetts, USA. Send the product and proof of purchase, transportation prepaid, to your local YSI representative or the YSI Massachusetts Repair Center. Repair or replacement will be made and the product returned, transportation prepaid. Repaired or replaced products are warranted for the balance of the original warranty period, or at least 90 days from date of repair or replacement.

Limitation of Warranty

This Warranty does not apply to any YSI product damage or failure caused by (i) failure to install, operate or use the product in accordance with YSI's written instructions, (ii) abuse or misuse of the product, (iii) failure to maintain the product in accordance with YSI's written instructions or standard industry procedure, (iv) any improper repairs to the product, (v) use by you of defective or improper components or parts in servicing or repairing the product, or (vi) modification of the product in any way not expressly authorized by YSI.

THIS WARRANTY IS IN LIEU OF ALL OTHER WARRANTIES, EXPRESSED OR IMPLIED, INCLUDING ANY WARRANTY OF MERCHANTABILITY OR FITNESS FOR A PARTICULAR PURPOSE. YSI's LIABILITY UNDER THIS WARRANTY IS LIMITED TO REPAIR OR REPLACEMENT OF THE PRODUCT, AND THIS SHALL BE YOUR SOLE AND EXCLUSIVE REMEDY FOR ANY DEFECTIVE PRODUCT COVERED BY THIS WARRANTY. IN NO EVENT SHALL YSI BE LIABLE FOR ANY SPECIAL, INDIRECT, INCIDENTAL OR CONSEQUENTIAL DAMAGES RESULTING FROM ANY DEFECTIVE PRODUCT COVERED BY THIS WARRANTY.

YSI Factory Service Center

United States

YSI Massachusetts
Repair Center
13 Atlantis Drive
Marion, MA 02738
Phone: 508 748-0366
Fax: 508 748-2543

Appendix D
Accessories

Basic System

The following come standard with the 6200 DAS Field Station (6200 DCP)

- 6200 DCP (data collection platform) with 32-bit microcontroller, 16 MHz...packaged in a fiberglass enclosure, NEMA 4X rating, hinged front cover, 2 lockable latches
- 64 KB Memory (8KB logging memory, 56 KB run-time memory)
- Bottom-mounted MS waterproof connectors for all standard sensors
- Internal connectors include DB-9 serial port, phone modem, solar power
- Serial cable for connecting DCP to PC (DB-9, 3 meter length)
- Terminal Strip internal connectors for non-standard sensor installations
- N-Type Antenna connector (not wired unless radio or cell modem installed)
- Lead Acid Battery (12 VDC, 12 Ah)
- User Manual with sensor manuals and calibration certificate in back

Memory Options for 6200 DCP

- 6201 256 KB Memory (200 KB logging), factory-installed only
- 6202 1 MB Memory (968 KB logging), factory-installed only

Standard Sensors for 6200 DAS

- 6214 Pyranometer
- 6213/6219 MET Sensor Suite (air temperature, relative humidity, wind speed and direction)
- 6215 Rain Gauge
- 6216 Rain Gauge, heated (separate AC power required)
- 6217 Barometer (factory installed into 6200 DCP enclosure)
- 6-Series Sondes (600R, 600XL, 600XLM, 6820, 6920) and bead kits for CE applications.

Power Options for the 6200 DCP Field Station

- 6240 AC Charger/Power Supply (factory installed, comes with 3 meter power cord)
- 6241 Solar Panel (with 10 m cable and mounting hardware)
- 6244 Battery (lead acid, rechargeable, 12 VDC, 12 Ah)

Communication Options for the 6200 DCP Field Station

- 6221 2-Way Radio Telemetry Package
- 6250 Base Station Radio (with power cord, small antenna and serial cable)
- 6222 Telephone Modem (factory-installed in the 6200 DCP enclosure)
- 6223 Cellular Phone Modem (factory-installed in the 6200 DCP enclosure)

Accessories

- 6205 Terminal Block Transient Protection (lightening and surge protection)
- 6251 Tower, 3-meter
- 6252 Tower, 10 meter
- 6507 6’ Patch Cable w/ MS-8
- 6504 Breakout Box
- 6508 Junction Box
- 6254 Battery Charger

Appendix E
Field Installation Examples

The following examples represent some typical field installation sites showing use of a variety of mounting supports for the 6200 DCP enclosure as well as various sensors that may be used with the 6200 DAS. These photographs and brief descriptions may provide you with some ideas related to how to set up your field station.

NOTE
When selecting a site for the 6200 DCP avoid other installed equipment.
Do not run sonde cables parallel to other industrial or RF equipment.

Site A…Remote Pier-based Water Monitoring Station

Existing Support Structure (utility pole), Solar Powered, Radio Communications Link
6820 Sonde for near pier water monitoring of marine bay

In Site A above you see a field station dedicated to water quality monitoring. The YSI 6820 sonde is set up to measure DO, temperature, salinity, pH, ORP, level, and turbidity in this marine bay. Readings are logged to the 6200 DCP every 15 minutes. The base station, about 5 miles away, interrogates the DCP once an hour by UHF radio link to download data to EcoWatch DCP. Solar power recharges the battery to maintain continuous power to the field station. Every couple of weeks someone visits the site to check sensors and perform maintenance if necessary (as shown above).

Site B…Remote Land-based Weather and Groundwater Monitoring

Tripod Mount, Solar Powered, Cellular Communications Link
Meteorological Sensors and 6-Series Sonde for Groundwater Monitoring

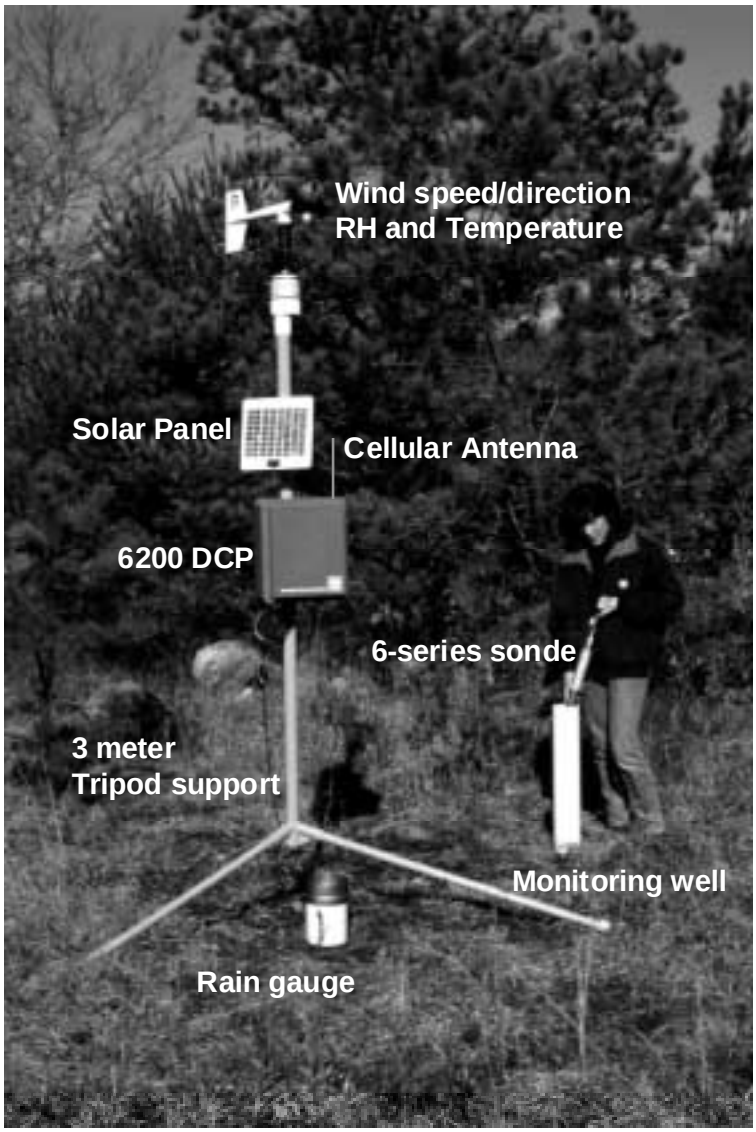

In Site B above, you see a field station that combines both meteorolgoical and water quality sensors. The monitoring well with a deployed 600XL provides ground water information on dissolved oxygen, temperature, conductivity, pH, and water level changes. The rain gauge provides rain accumulation and rain rate data. The MET suite of sensors mounted on top of the tower includes wind speed and direction, relative humidity and air temperature readings. Inside the 6200 DCP is a barometer (vented to outside) to provide barometric pressure readings.

The battery inside the DCP is charged during daylight by the solar panel. A cellular Modem inside the enclosure provides the communication link for transferring data to EcoWatch DCP and reconfiguring system and sensor settings from the base station. The environmental scientist shown near the monitoring well is performing a routine check of the sensors.

Site C…Remote Bridge-based Meteorological and Water Monitoring

Bridge Rail Support, Solar Powered, Cellular Communications Link
Meteorological Sensors and 6-Series Sonde for River Monitoring (swift moving water)

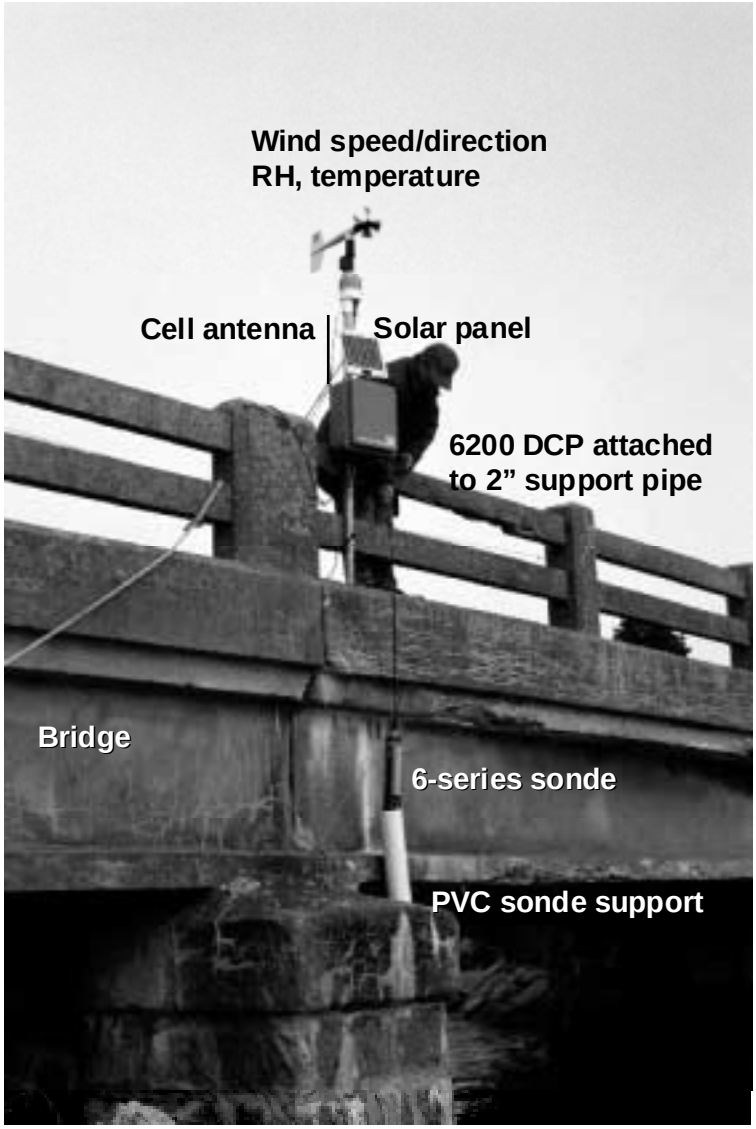

In Site C above, you see a field station that combines meteorological and water quality sensors with a 6200 DCP mounted to the guardrail of a bridge. A 2" diameter steel pipe is secured to the bridge rail and the 6200 enclosure, the MET suite and solar panel are secured to the pipe using mounting hardware included with the components. The sonde is protected from the swift moving water using PVC conduit attached to the bridge support near the water. Once lowered into position only the lower portion of the sonde is exposed to the water.

Meteorological parameters include wind speed and direction, relative humidity, air temperature and barometric pressure. Water quality parameters include DO, temperature, conductivity, pH, ORP, nitrate, ammonia and chloride. Data are transferred via a cellular Modem communication link and power to the station is supplied by battery that is charged by the solar panel.

Site D…Coastal Field Station for Weather and Water Quality Monitoring

Tripod Support, Solar Powered, Cellular Communications Link
Meteorological Sensors and 6820 Sonde (shown out of water in photo below)

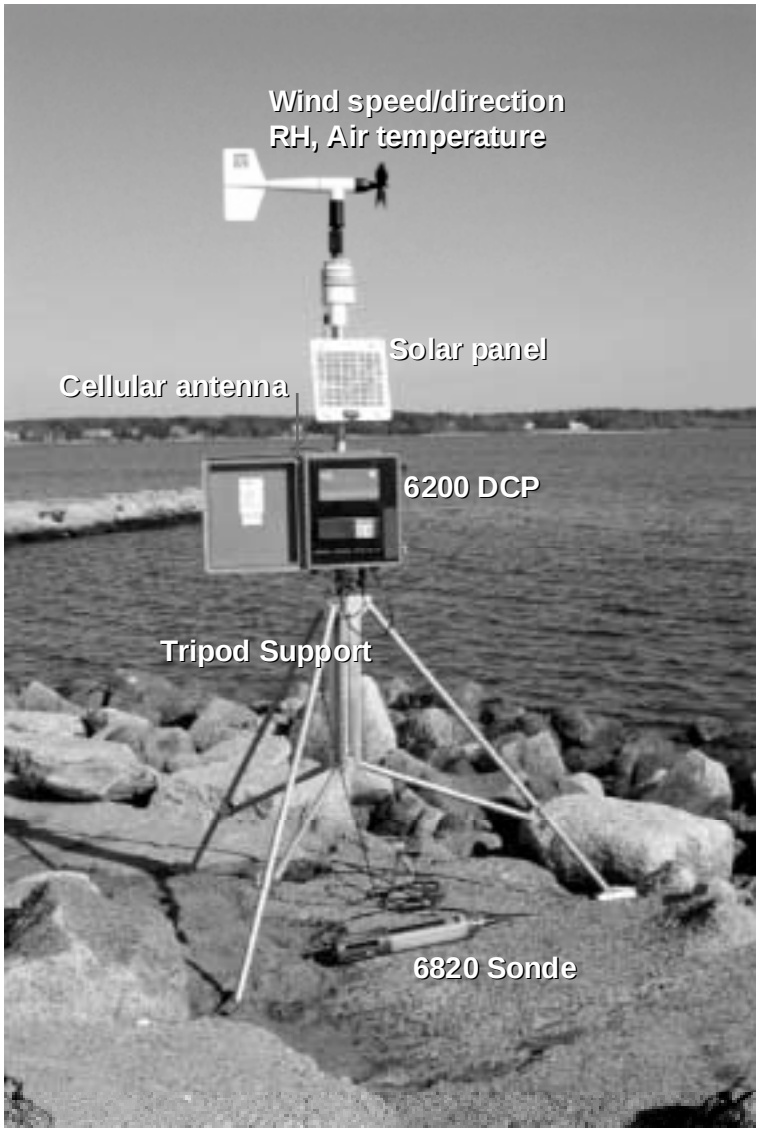

In Site D above, both meteorological and water quality sensors are used at this field station on a rocky marine coastal environment. The tripod support must be secured to the rocks with appropriate anchors. Guy lines may be required in especially windy areas. The MET suite, solar panel and 6200 DCP are all attached to the tripod main post. The cellular antenna is attached to a mounting bracket secured to the DCP enclosure. Although not shown in the photograph, the sonde is secured to a support off the rocks to the right. As in other sonde deployments, PVC pipe or equivalent makes a useful support to stabilize the sonde from wave action and tides.