3710R/3710VR/3750 Refrigerated Samplers

Instruction Manual

Part #60-3713-046 of Assembly #60-3714-032

Revision S, February, 2002

Foreword

This instruction manual is designed to help you gain a thorough understanding of the operation of the equipment. Isco recommends that you read this manual completely before placing the equipment in service.

Although Isco designs reliability into all equipment, there is always the possibility of a malfunction. This manual may help in diagnosing and repairing the malfunction.

If the problem persists, call or email the Isco Customer Service Department for assistance. Contact information is provided below. Simple difficulties can often be diagnosed over the phone. If it is necessary to return the equipment to the factory for service, please follow the shipping instructions provided by the Customer Service Department, including the use of the **Return Authorization Number** specified. **Be sure to include a note describing the malfunction.** This will aid in the prompt repair and return of the equipment.

Isco welcomes suggestions that would improve the information presented in this manual or enhance the operation of the equipment itself.

Contact Information

Phone:	(800) 228-4373 (USA, Canada, Mexico)
	(402) 464-0231 (Outside North America)
Repair Service:	(800) 775-2965 (Analytical and Process Monitoring Instruments)
	(800) 228-4373 (Samplers and Flow Meters)
Fax:	(402) 465-3022
Email address:	info@isco.com
Website:	www.isco.com
Return equipment to:	4700 Superior Street, Lincoln, NE 68504-1398
Other correspondence:	P.O. Box 82531, Lincoln, NE 68501-2531

Table of Contents

List of Figures

List of Tables

List of Examples

Chapter 1 Product Description

INTRODUCTION

This chapter contains a brief discussion of the organization of the manual, an overall description of the sampler, and a list of technical specifications.

MANUAL ORGANIZATION

This manual contains the information necessary to operate, maintain, and service the 3710R/3710VR/3750 Refrigerated Sampler.

The manual has six chapters:

Chapter 1 is a general introduction to the sampler and refrigerator.

Chapter 2 concerns preparation for use, operating the refrigerator, and operating the automatic refrigerated sampling.

Chapter 3 covers programming guidelines.

Chapter 4 contains routine maintenance information for the 3710R/3710VR/3750.

Chapter 5 discusses optional equipment that will interface with the sampler.

Chapter 6 includes servicing information to assist you in correcting problems. It also contains an accessories list and an illustrated list of replacement parts.

DESCRIPTION

The 3710R/3710VR consists of a 3750 refrigerator and a 3710 controller mounted on the refrigerator. This instruction manual covers the four configurations in which the refrigerator is available: the 3710R, the 3710VR, the stainless steel 3750, and the vinyl 3750. Each configuration is discussed individually in the following sections.

3710R/3710VR REFRIGERATED SAMPLER

The 3710R/3710VR/3750 Refrigerated Sampler is a programmable liquid sampler designed for composite sampling. It is one of Isco's 3700 Series of portable and refrigerated samplers. The extensive sampling capabilities, flexible programming, and durable construction make the sampler ideally suited for general purpose or priority pollutant sampling.

The sampler, although extremely easy to use, offers a number of very sophisticated features. The following sections introduce key features and provide an overview of the unit's sampling capabilities and a variety of interfacing equipment. Examples of interfacing equipment include Isco flow meters for flow proportional sampling and sampler enable control, Isco Field Printers that print the sampler's program settings and sampling results, and laptop computers which collect and store the same data. A brief discussion of this interfacing equipment is placed at the end of this chapter.

The 3710R Refrigerated Sampler consists of the 3750 Stainless Steel Refrigerator with the 3710 controller installed on the refrigerator at the factory. The 3710VR Refrigerated Sampler consists of the 3750 Vinyl Refrigerator with the 3710 controller installed at the factory. (The 3750 is discussed in *3750 Sampler Refrigerator* on page 3.) The controller is housed in the watertight control box mounted on the top of the refrigerator. However, the refrigerator's lower compartment is not watertight.

The controller consists of a microprocessor with software embedded in a PROM (Programmable Read-Only Memory) and supporting electronics. The controller runs the pump, responds to the keypad, and presents information on the display. It governs all automatic sampling according to user-selectable program settings. The controller also provides for manual control of the sampler; for instance, you can run the pump forward with the PUMP FORWARD key or initiate a manual sample with the MANUAL SAMPLE key.

The control panel, containing the 40-character alphanumeric LCD (Liquid Crystal Display) and keypad, is located on the top of the control box. The 23-position keypad is used to enter program parameters and direct the following controls: on/off, pump reverse, pump forward, stop the pump, start sampling, resume sampling, and display the operating status. A desiccator is installed in the control box to prevent moisture damage to the electronics and pump.

PROGRAMMABLE FEATURES

An intuitive user-interface allows the sampler to be programmed for both simple and complex sampling schemes. The LCD prompts you through the programming process by presenting a choice or a question on the sampler's LCD. Programming the sampler is a matter of responding to displayed prompts with the keypad. Two programming modes, "basic" and "extended," are standard with the sampler. The basic programming mode allows you to set up typical sampling routines easily and efficiently.

The extended programming mode expands the versatility of the sampler by providing options which allow you to create complex sampling routines.

The LCD not only prompts you through the programming process, but also allows you to closely monitor a sampling routine as it is executed. The LCD displays pertinent information about the routine – for example, the time of the next sample – and notifies you of any problems encountered during the routine. As the routine progresses, the sampler logs (stores) key information about the results of the routine. The results include the start time, any halt and resume times, time of samples, and cause of any missed samples. This information is accessible during a routine or after a sampling routine is finished. You can view this information from the sampler's display or retrieve it with the Field Printer or a laptop computer running Isco's SAMPLINK® software.

Flexible Sampling Intervals

The 3710R/3710VR is designed for composite sampling. Samples may be collected at user-definable time intervals (time-pacing) or at equal flow volume intervals using flow pulse inputs from an external flow meter (flow-pacing). The flow interval may be set from 1 to 9999 flow pulses. Sampling can be terminated by a weight table shut-off mechanism or by a user-defined number of samples.

The sampler offers two types of time-pacing: uniform and nonuniform. Uniform time-paced samples may be taken at regular time intervals, a sample every 15 minutes, for example. The interval between samples can be set from 1 minute to 99 hours, 59 minutes in 1 minute intervals. Using the extended programming mode, you can specify up to 999 (or bottle volume dependent) non-uniform time intervals in minutes. For example, you can program the sampler to take the first six samples at 10 minutes intervals, then four more samples at 15 minute intervals, and so on. Nonuniform time intervals can be from 1 to 999 minutes in 1 minute intervals. Nonuniform times can be specified in a clock-time format by entering a time and date for each sample. The sampler will accept up to 99 nonuniform clock times.

Additionally, the Sampling Stops and Resumes feature allows you to create an intermittent sampling schedule. With this extended programming feature, you can sample only during key periods of the day. For example, you may wish to sample only during the hours of 6:00 AM to 8:00 AM, and 5:00 PM to 7:00 PM. You can enter up to 12 sampling stops and 12 resumes. Sampling stops and resumes can be used with both flow- and time-paced routines and with uniform and nonuniform time intervals.

Accurate Sample Volumes

The sampler can be programmed to take sample volumes of 10 to 9990 milliliters. Equipped with the patented LD90 liquid presence detector, the sampler delivers accurate, repeatable sample volumes in changing head conditions. The LD90 is a *non-wetted* liquid presence detector. It detects virtually any pumpable liquid and because it is non-wetted; sample conductivity, viscosity, temperature, and composition do not affect detection. Although it is not normally necessary, samples can be calibrated, if desired.

Flexible Start Times

A sampling routine can be programmed to use a specific start time and date or a start time delay. The sampler will accept a specific start time and date up to one month in advance of the current date. The start time delay is the period between the time you press the START SAMPLING key and the time the routine actually starts. It is adjustable from zero to 9999 minutes.

Other features are available. Program storage allows you to store up to three separate programs, eliminating the need to reprogram the sampler for recurrent sampling routines. A program lock is available for protection from unauthorized program alterations. When enabled, a password must be entered before any program settings can be changed, although program settings can be viewed at any time.

Foreign Languages and Metric Units of Measure

The sampler provides displays in French, German, and Spanish. Additionally, the software supports entries in metric units of measure. Samplers using French and German language displays support metric units for suction line and suction head measurements. Metric units include volumes in milliliters, suction head and suction line length in decimeters, and suction line inside diameter (ID) in millimeters. Samplers operating with English displays support either English or metric units for suction line and suction head measurements. (Sample volume units are always entered in milliliters, regardless of the selected language.)

DELIVERY SYSTEM

The sampler uses a peristaltic pump for sample collection. The sample liquid is under pumped flow at all times; there are no metering chambers or gravity-fed internal tubing. Each sampling cycle includes an air pre-sample purge and a post-sample purge to clear the suction line both before and after sampling. These features make the sampler ideal for both "suspended solids" and "toxic materials" sampling. Cross contamination between samples is minimized and sites for sediment accumulation in the system are eliminated. Materials in contact with the sample fluid are limited to the strainer, suction line, pump tubing, and collection bottles. The system can be easily and safely cleaned by simply replacing relatively inexpensive lengths of tubing.

Pump speed is approximately 250 RPM which generates a velocity sufficient to obtain representative samples. The pumping rate of 3500 ml per minute is generated when using 3/8 inch ID suction line at 3 ft of head. The line transport velocity, using the same suction line and head, is 2.5 ft per second. Volumetric accuracy is not significantly affected by pump speed since the delivered volume is based on a patented electronic count of the number of pump revolutions.

Liquid Detector

The LD90 gives the sampler the ability to deliver accurate, repeatable sample volumes regardless of changing head conditions. Typical sample volumes are accurate to within 10% of the programmed volume and repeatable to within ± 10 ml. The detector and a programmable setting provide for automatic rinsing of the suction line when concerns of cross contamination arise. A programmable setting for sampling retries is available. If the suction line becomes clogged and no liquid is detected in the line, the sampler can be programmed to repeat a purge cycle – up to three times – to clear the clogged line.

Pump Tubing and Suction Lines

The pump tubing is Silastic™ medical grade silicon rubber. Liquid is transferred from the source to the pump through either 1/4 or 3/8 inch ID vinyl or 3/8 inch ID Teflon® suction tubing. The pump tubing and suction lines are easily replaced, minimizing the need for cleaning. The sampler automatically monitors pump tubing wear: a tubing warning indication is reported on the display when the pump revolution count exceeds a user-specified wear limit.

Weight Table Shut-Off

The weight table shut off provides a sampling fail-safe shut-off in case the container is accidentally overfilled. When the container is filled to a selectable, predetermined level, a weight activated control stops the sampling process and a red indicator light illuminates to alert you of the full container.

Strainers

Two stainless steel strainers are available for priority pollutant applications: a larger unit for normal flow and a smaller unit for low flow situations. An all plastic strainer is available for sampling from highly acidic flow streams. A weighted polypropylene strainer is used for general purpose sampling applications.

Bottle Configurations

Four sample containers are available:

- 9400 ml (2.5 gallon) glass container with Teflon lined cap.
- 9400 ml (2.5 gallon) polyethylene container with unlined cap.
- 15,000 ml (4 gallon) polyethylene container with unlined cap.
- 20,800 ml (5.5 gallon) polyethylene container with unlined cap.

Power Sources

The refrigerator operates from 120 VAC, 60 Hz power (optionally 240 VAC, 50 Hz). A 12 VDC power converter, built into the refrigerator, supplies power to the controller.

In the case of critical sampling, the sampler's controller may be powered by an external 12 VDC battery, as described in *Connection to a Power Source* on page 10. This allows sampling to continue even if a power failure causes the refrigerator's cooling system to stop functioning. Optionally available from Isco is a Power Fail-Safe unit which, under normal conditions, trickle-charges an external battery, and, in the event of a line power failure, supplies 12 VDC power from the battery to the sampler's controller. Consult the factory for details. More information on Isco power sources is available in Isco's *Power Products Guide*.

3750 SAMPLER REFRIGERATOR

If you want to convert a presently owned 3710 Portable Sampler into a refrigerated unit, or to have both portable and refrigerated options with the same controller, the 3750 Sampler Refrigerator is available. The 3750 includes all the parts necessary to attach the controller from a portable sampler to the refrigerator.

The exterior of the refrigerator is constructed of either stainless steel or vinyl-clad steel. Foamed-in-place insulation stiffens the sample compartment. The plastic interior will not support bacterial growth or retain odors. Both the controller cover and sample compartment may be individually padlocked. The door has a magnetic gasket which seals against a stainless steel bezel.

The refrigerator's thermostat is calibrated at the factory to be accurate at 4°C (39°F). A forced-air condensing coil and front ventilation allow the unit to be positioned close to a wall or in a corner with clearance required only for the controller cover to open. Wrap-around construction of the evaporator plate provides quick and efficient cooling of the sample compartment. Defrosting is automatic under normal operating conditions. The technical specifications of the 3710R/3710VR/3750 are found in **Table 1**.

INTERFACING EQUIPMENT

A full line of accessories and interfacing equipment is available to help you adapt the sampler to your specific application; some of the more common items are briefly noted below. Other key accessories are noted throughout this manual, where appropriate. A full list of accessories is found in the *Accessories List* appendix.

Isco Flow Meters

The sampler will accept flow pulses from all Isco Flow Meters and Flow Loggers for flow proportional sampling. Isco Flow Meters and Flow Loggers are equipped with a sampler enable feature. They can inhibit a sampler until the level of the flow stream reaches a predetermined height or "set point"; when that height is reached, the flow meter enables the sampler and starts the sampling routine. If the level of the stream falls below the set point, the flow meter can disable the sampler and halt the routine.

When equipped with a rain gauge, Isco Flow Meters and Flow Loggers can monitor rainfall. The flow meter can be programmed to enable the sampler when the measured amount of rainfall reaches a predetermined set point.

Set points or pairs of set points — pairs can be level and rainfall rates, level and elapsed time, rainfall and elapsed time, and so on — form the *sampler enable control condition*. A control condition is simply the set of parameters defining the conditions in which a flow meter will enable the sampler. For example, a flow meter can be programmed with a control condition which is satisfied when the flow meter detects 1/4 inch of rainfall in 15 minutes. While level control conditions can be entered directly at the flow meter front panel, most control conditions must be downloaded to the flow meter from an IBM® compatible computer running Isco's FLOWLINK® software.

In addition to enable control conditions, Isco's Flow Meters and Flow Loggers provide an internal memory module. When programmed with the FLOWLINK software, the flow meters store level or flow rate readings, rainfall measurements, and sample event data from the samplers. The stored data, which expands the information available from the sampler's results displays, can be retrieved with a computer running the FLOWLINK software. For more detailed information on sampler enable control conditions and data retrieval, refer to the *FLOWLINK Instruction Manual* provided with the FLOWLINK software.

Isco Field Printers Produce Sampling Reports

Isco provides two additional interfacing products, the Isco Field Printer and the SAMPLINK software, which collect data from the sampler's memory. The Isco Field Printer is a portable field printer designed to print sampling data from a 3700 Series Sampler. You can initiate the reports from either the printer or the sampler.

The Isco Field Printer prints two reports which reproduce the data collected by the sampler. The first report lists the current status data and program settings for the sampling routine. The second report lists the sampling results currently stored in the sampler's memory. The results include the time, date, and bottle numbers for each sample event and any errors encountered during the routine.

SAMPLINK and Laptop Computers

SAMPLINK is designed to run on a laptop computer which can be taken to the sampling installation to collect the data. SAMPLINK collects the data and formats it into two files: a text file and a FLOWLINK compatible sample event file. The text file can be loaded into a word processor for editing. SAMPLINK's text file contains the same two reports produced by the Field Printer. The first report contains sampler status information and program settings. The second report contains the sampling results. Because the text file is pre-formatted into report form, you can use DOS printing commands to print the file without editing with a word processor. The sample event files can be used with FLOWLINK to produce sampling reports and graphs.

583 Field Interrogator

The 583 Field Interrogator is a small, environmentally-hardened field computer. Compatible with 3700 Series Samplers, it collects sampling data as a text file. The Field interrogator will print the file on an IBM PC-compatible serial printer or send it to a computer where the file can be edited with a word processor.

Non-Isco Flow Meters

Flow pulses are also accepted from certain non-Isco flow meters; two interface accessories are available to convert incompatible (non-Isco) signals to pulses acceptable to the sampler. The Type A Interface converts pulse duration input; the 4-20 mA Sampler Input Interface converts 4-20 mA output signals.

The sampler sends event marks to both Isco and non-Isco flow meters each time a sample is taken. This information is recorded by the flow meter. The event mark can be adjusted according to the type of flow meter used.

Liquid Level Actuator

Another item, the Liquid Level Actuator, is used to provide level sensitive control of the sampler. The actuator can be used as an alternative to a Flow Meter or Flow Logger.

TECHNICAL SPECIFICATIONS, CONTROLS, AND CONNECTORS

The technical specifications, controls, and connectors of the 3710R/3710VR/3750 are listed in **Tables 1** and **2**. Refer to **Figure 6** on page 11 for a pictorial view of the controls and connectors.

Table 1 Technical Specifications

Physical Specifications

Physical Size:	Height: 45.75 inches (116 cm) Width: 24.25 inches (62 cm) Depth: 25 inches (64 cm)
Dry weight:	Stainless Steel: 145 lb (65.8 kg) Vinyl-Clad Steel: 120 lb (54.5 kg)
Operational Temperature Range:	32°F to 120°F (0°C to 49°C)
Control Box Only: (does not include refrigerator)	Self Certified NEMA 4X and 6 ratings (Submersible, watertight, dust-tight, and corrosion resistant)
Temperature set point accuracy:	± 1.8°F (1°C) at 39°F (4°C)
Pulldown time from 75°F (24°C) to 39°F (4°C):	30 minutes, typical
Recovery time, door open 1 minute with unit operating at 39°F (4°C), 75°F (24°C) ambient:	10 minutes, typical

Power Specifications

Sampler Controller Power Requirement:	12 VDC AC power converter Sampler standby current 10 mA, maximum
Voltage:	120 V, 60 Hz (240 V, 50 Hz available)
Current: Running: Starting:	2.5 amp, typical 120 volts. (1.25 amp, typical 240 volts) 12 amp, typical 120 volts. (6 amp, typical 240 volts)
Controller Internal 3V Lithium Battery Capacity	5 years, minimum (maintains internal logic and program settings)

Pump and Tubing Specifications

Suction Tubing (intake):	3 to 99 foot lengths of: 1/4-inch ID vinyl 3/8-inch ID vinyl 3/8-inch ID Teflon lined
Suction Lift:	26 feet (7.9 m), maximum
Pumping Rate (at 3 feet of head):	1/4-inch ID suction tubing: 3000 ml/minute 3/8-inch ID suction tubing: 3500 ml/minute
Line Transport Velocity (at 3 feet of head):	1/4-inch ID suction tubing: 5.1 ft/sec 3/8-inch ID suction tubing: 2.5 ft/sec

Clock Specifications

Real Time Clock Accuracy:	1 minute/month, typical

Sample Specifications

Sample Volume Accuracy:	With the liquid detector enabled and automatic compensation for head: typically, the greater of ± 10% or ± 20 ml, over a head range of 1 to 12 feet and sampler supply voltage of 10 to 13 volts.
Sample Volume Repeatability:	± 10 ml, typical.
Sample Frequency:	Selectable from one minute to 99 hours, 59 minutes in 1 minute increments between consecutive samples, or from 1 to 9999 flow pulses in single pulse intervals. Up to 999 nonuniform times may be entered in minute intervals or up to 99 times as specific clock times.

Flow Meter Signal Specifications

Flow Meter Signal Requirements:	5 to 15 volt DC pulse or isolated contact closure of at least 25 milliseconds in duration. (4-20 mA or pulse duration signal may be converted with optional interface unit).

Table 2 Controls and Connectors

Controls

CONTROL	SETTING	FUNCTION
Thermostat:	OFF, WARMER, COOLER, 4ºC (39ºF).	Turns the refrigeration system on/off, selects the sample temperature.
Weight Table Automatic Shut-off:	Variable.	Fully adjustable, weight sensitive control stops sampling program when predetermined volume is reached.

Connectors

CONNECTOR	TYPE	FUNCTION
12 VDC:	2-pin female cable mounted.	12 VDC power supply for sampler.
Flow Meter:	6-pin male panel mounted.	Connects sampler to external flow meter.
Printer:	6-pin female panel mounted.	Connects sampler to Isco Field Printer or laptop computer.
Sampler:	6-pin female cable mounted.	Connects shut-off cable from the weight table and the flow meter to the sampler's controller.
120 or 240 VAC:	3-pin grounded male line cord.	Supplies line voltage for the unit.

Indicator

INDICATOR	TYPE	FUNCTION
Bottle Full Light:	Red light.	Indicates that composite sample has reached the predetermined volume and sampling has stopped.

Chapter 2 Setup and Operating Procedures

Introduction

This chapter provides the information necessary for everyday operation of the refrigerator. Included are sections covering setup, operation of the refrigerator, and automatic refrigerated sampling.

Summary of Setup Procedure

The following sections detail the preparations made before using the refrigerator. To place the sampler into operation:

1. Install the sampler.

   Although the suction line can extend to a liquid source up to 99 feet from the sampler, note that the maximum lift for the peristaltic pump with either the Teflon or vinyl line is 26 feet. When installing the sampler, be sure the head — the vertical distance between the level of the liquid source and the pump — is no greater than 26 feet. The pump will not be able to deliver samples for heads of 26 feet or greater.
2. Do not install the refrigerator in a location where the lower compartment could become submerged.
3. Be sure the sampler is connected to a 120 VAC power source. Turn the refrigerator on.
4. Attach the suction line.
5. Place the suction line inlet properly in the liquid source.
6. Connect the sampler to a flow meter, if required.
7. Program the sampler. See **Chapter 3**.
8. Calibrate the sample volume, if desired. **Chapter 3** contains calibration instructions.)
9. Calibrate the weight table. See *Automatic Sampler Shut-Off* on page 12.
10. Start the sampling routine.

Attaching the Suction Line

The suction line is the piece of tubing that extends from the sampler's pump tubing intake, at the top of the liquid detector, to the liquid source. There are three standard suction lines available: plasticized vinyl tubing in 1/4 inch (0.64 cm) or 3/8 inch (0.94 cm) inside diameters, or FEP Teflon with a polyethylene cover in 3/8 inch inside diameter. The polyethylene cover over the 0.02 inch (0.051 cm) wall Teflon tubing prevents the Teflon liner from kinking or collapsing in service and protects it from abrasion and other damage.

The vinyl suction tubing contains a very low PPM (parts per million) level of phenols. If this affects your samples, use the Teflon suction line.

Both vinyl and Teflon lines can be cut to any length from 3 to 99 feet in 1 foot increments. Cut the suction line in whole foot increments: lengths of 4 feet, not 3.5 feet. The controller will accept only whole numbers as suction line lengths. To ensure the accuracy of the sampler, the suction line length entered must equal that of the actual line measurement. When programming the sampler, you must enter the inside diameter, type, and length of suction line used.

Cut the line to the shortest length feasible: this aids the downhill routing. Avoid loops of coiled suction line which may hold residual amounts of liquid which would cross contaminate sample volumes. A shorter suction line will also extend battery life and pump tube life because a shorter pumping cycle will be needed to deliver the sample volume.

The suction line tends to float in deep flow streams, dislodging the line and strainer. **Table 3** shows the maximum depths you can submerge the lines and strainers without risks of flotation. At depths exceeding the safe depths, anchor the line and strainer securely.

Table 3 Safe Depths of Submersion for Suction Line

Strainer	1/4" Vinyl Line	3/8" Vinyl Line	3/8" Teflon Line
Stainless Steel:	-------	22 feet	15 feet
Low-Flow Stainless Steel:	14 feet	7 feet	-------
Polypropylene:	22 feet	11 feet	-------
CPVC:	-------	4 feet	-------

Attaching the Vinyl Suction Line to the Pump Tubing

Vinyl suction line is attached to the pump tubing with the tube coupling as illustrated in **Figures 1** and **2**. Two couplings are available, one for each size of vinyl line.

Each coupling has two color coded nylon clamps attached to the stainless steel ferrule. The black clamp secures the pump tube to the coupling. The white clamp secures the suction line. To attach the line or tubing to the coupling, push it onto the appropriate side of the ferrule and tighten the clamp by squeezing the finger pads together. To loosen a clamp, twist the two sides of the clamp until the teeth disengage.

Attaching the Teflon Suction Line to the Pump Tubing

The Teflon line is attached to the pump tubing by inserting the line into the pump tubing and securing it with a suitable clamp.

Figure 1 Tube Coupling

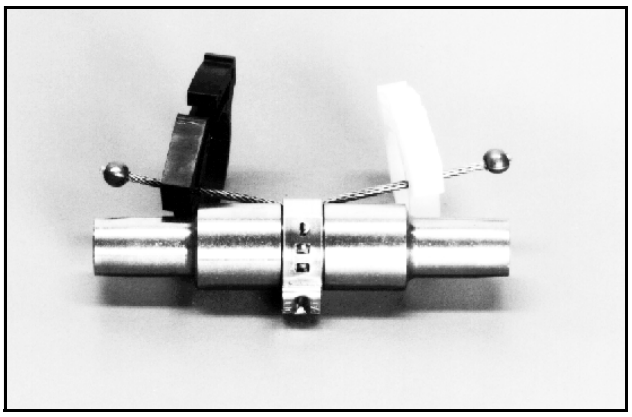

Figure 2 Tube Coupling with Suction Line and Pump Tubing

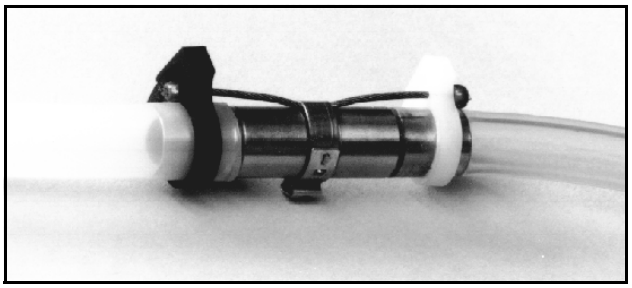

Placement of the Suction Line and Intake

Route the suction line from sampler to sampling point so that it slopes continuously downhill. This helps drain the suction line when the peristaltic pump purges the line and minimizes the possibility of cross contamination. When the sampler is used in near freezing temperatures, thoroughly draining the suction line minimizes the possibility of frozen liquid clogging the line.

Strainers

The 1/4 and 3/8 inch ID (inside diameter) vinyl suction lines are shipped from the factory with a polypropylene bodied weighted inlet strainer installed on the end of the suction line, as shown in **Figures 3** and **4**.

Optional all stainless steel strainers (see **Figure 5**) are also available for use with the vinyl or Teflon suction lines. For sampling from highly acidic flow streams, an all plastic strainer is available. Bulk suction line can be purchased without strainers. Refer to the *Accessories List* appendix more information.

The strainer prevents solid particles over a specific diameter from entering and clogging the suction line. It is recommended for bottom sampling or sampling from streams containing large solids. The 1/4 inch strainers supplied for use with the 1/4 inch ID suction line have 15/64 inch (0.56 cm) diameter holes. The 3/8 inch strainers supplied for use with the vinyl or Teflon 3/8 inch ID suction line have 23/64 inch (0.9 cm) diameter holes.

Attaching the Debris Deflector to the Strainer

A debris deflector prevents debris from accumulating on the hose clamp which attaches the strainer to the suction line. The 3/8 inch polypropylene strainer is shipped with the suction line attached and the debris deflector in place.

To replace the suction line on a strainer with a debris deflector:

1. Push the deflector back up the line to expose the hose clamp. See **Figure 3**.
2. Loosen the clamp and pull the line from the strainer's ferrule.
3. Remove the deflector from the old line and thread it on the new line. Push the deflector back on the new line; leave enough room to work with the hose clamp.
4. Thread the hose clamp on the new line.
5. Slip the line onto the ferrule and secure it with the hose clamp.
6. Push the debris deflector down the line and onto the strainer. **Figure 4** shows the debris deflector in place.

Figure 3 Polypropylene Strainer with Debris Deflector

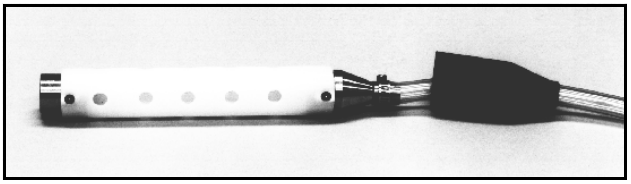

Figure 4 Polypropylene Strainer with Debris Deflector in Place

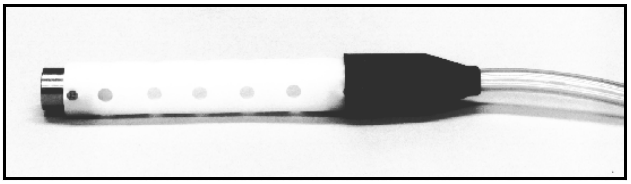

Figure 5 Stainless Steel Strainer

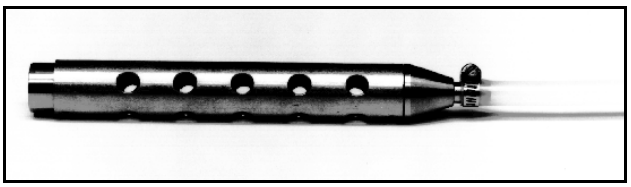

Weighted Strainer Optional

The use of the weighted strainer is optional. When heavy suspended solids are involved and flow stream velocities are significant, some field investigation results indicate more representative samples are obtained without the strainer. If the strainer is not used, a short piece of thin walled aluminum tubing may be attached to the end of the suction line and the tubing anchored in the flow stream so that the inlet is oriented upstream. The thin wall will provide minimum disturbance of the flow stream and aluminum ions are usually not of concern in analysis. Whether the strainer is used or not, the pre-sample purge cycle should be sufficient to remove any debris which may collect over the strainer or tubing entrance between sampling events.

Intake Placement

The proper placement of the sampler intake assures the collection of representative samples. The intake should be placed in the main flow, not in an eddy or at the edge of flow. The vertical position of the intake in the flow is important. An intake at the bottom may result in excess heavy solids and no floating materials, while placement at the top may result in the opposite.

Connection to a Power Source

The 3750 operates from 120 VAC, 60 Hz power (optionally 240 VAC, 50 Hz). To provide power for the refrigerator and controller, plug the refrigerator's line cord into an appropriate source. A 12 VDC power converter, built into the refrigerator, supplies power to the controller. A 3V lithium battery, with a minimum service life of 5 years, maintains the controller's real time clock and program settings when power is disconnected.

The sampler's controller may be temporarily powered by an external 12 VDC battery when AC power is not available. Simply disconnect the power cable shown in **Figure 6**, and attach the battery connector to the sampler's power connector. A rechargeable nickel-cadmium battery is most commonly used; however, lead acid batteries are available.

Isco's nickel-cadmium battery has an operating capacity of seven standard sampling programs after an 18-hour charge. (A standard sampling program is defined to be 24 samples at a rate of one 200 ml sample per hour, using 10 feet of 3/8 vinyl suction line at a 5-foot head.)

The lead-acid battery has an operating capacity of 11 standard sampling programs. An Isco 120 VAC 50/60 Hz or 240 VAC 50/60 Hz Power Pack can also power the sampler. Both power packs may also be used to recharge the Isco batteries.

Connection to a Flow Meter or Flow Logger

The sampler's controller must be connected to an external flow meter or flow logger to permit flow proportional sampling. This connection is made to the flow meter connector (shown in **Figure 6**) located on the rear of the control base. A small port is provided on the right side of the control base for routing the flow meter cable. Refer to **Chapter 5** for information on devices to interface the sampler with non-Isco flow meters.

Figure 6 Flow Meter Cable Connection and Suction Line Port

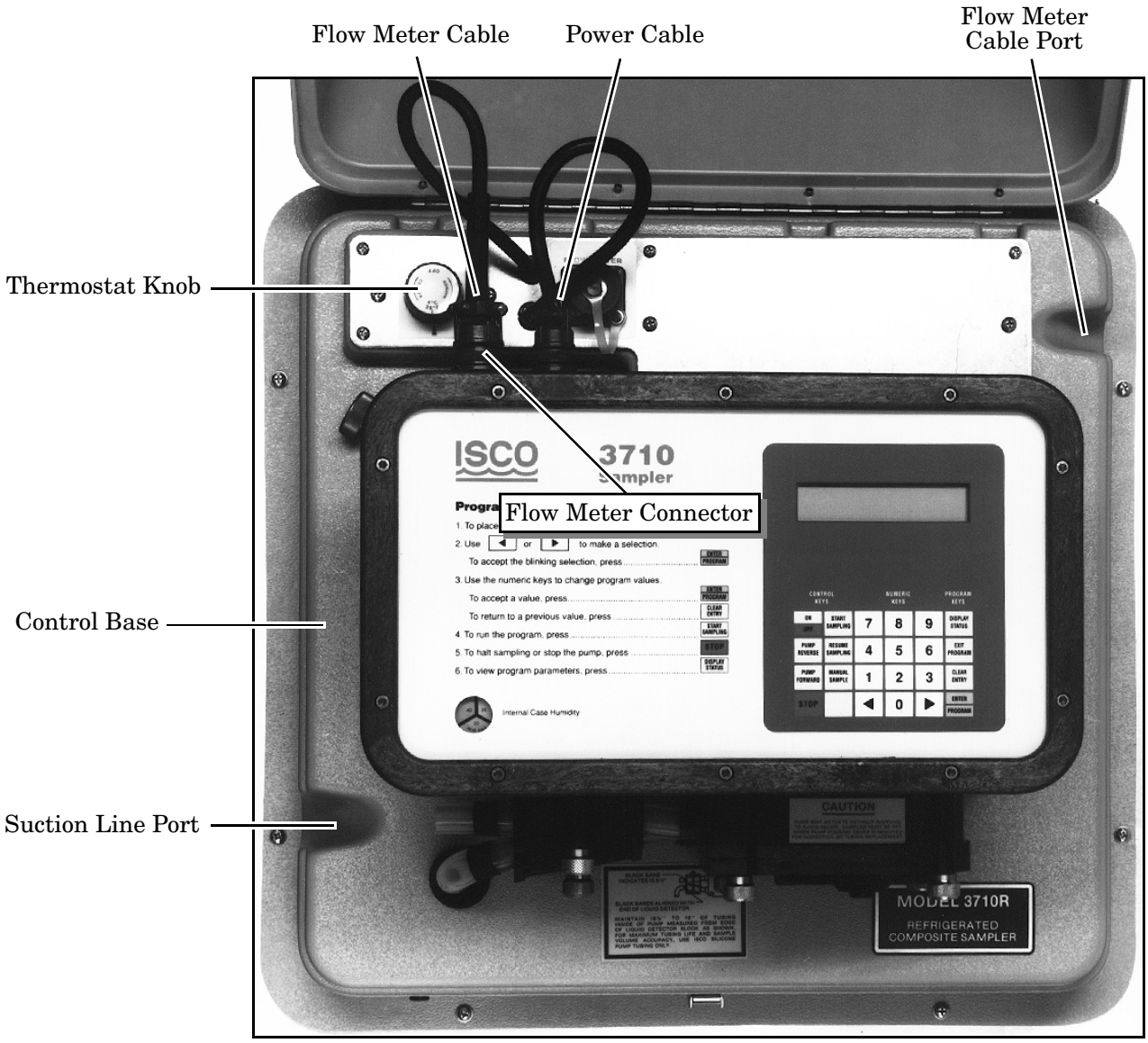

Operation of the Refrigerator

To operate the refrigerator, turn the thermostat knob, shown in **Figure 6**, to the desired sample temperature. The interior air temperature should reach the set value within 20 to 30 minutes. The refrigerator's thermostat is calibrated in sample temperature. That is, if the temperature is set at 4°C (39°F), the temperature of the sample after being in the refrigerator will be 4°C ± 1°C, although the refrigerator air temperature may vary more than this due to the nature of the refrigeration cycle.

NOTE

If the thermostat knob is turned to the lowest setting, the sample may freeze.

Automatic Defrosting

Under normal conditions, you should not need to defrost the refrigerator manually. The cooling coil temperature always cycles from below freezing (when the compressor is running) to above freezing (when the compressor is off) during the normal refrigeration cycle.

If the unit is used in hot, humid conditions, you may need to defrost the unit after several days of operation. Turn the thermostat off and allow the refrigerator to defrost. The refrigerator is equipped with a water diverting tray and a drain tube to route defrost water to an evaporating tray in the rear of the refrigerator. Water in the tray is evaporated by the warm air from the condensing system. The refrigerator compressor may not start immediately when the thermostat is turned on or turned to a lower setting due to the action of the compressor overload relay described in *Electrical System* on page 71. After a short time, the compressor will start and initiate the cooling cycle.

Set Up for Automatic Sampling

Before the unit is ready to be set up for automatic sampling, check that:

1. The control box has been attached to the refrigerator (when necessary).
2. The refrigerator has been connected to a power source.
3. The controller has been connected to an external flow meter (if used).
4. The suction line has been attached to the pump tubing.
5. The weight table shut-off point has been adjusted as described in *Automatic Sampler Shut-Off* on page 12. An empty sample container has been properly located on the weight table and the pump tube inserted approximately 2 inches into the hole in the container's lid.
6. The thermostat has been adjusted to the desired sample temperature.

Locking

After the sampler has been programmed as desired and the sampling program started, the cover should be closed and latched in place. Locking holes are provided in the controller cover latch and on the refrigerator door to accept padlocks to prevent unauthorized tampering.

Automatic Sampler Shut-Off

The refrigerator has an adjustable, weight activated sample container table to automatically shut-off the sampling process when the sample container is filled to a predetermined level. When the container is filled to the preset level, sampling stops and the LCD displays alternating messages; the message, "DONE," will alternate with the message, "FLOAT/WEIGHT TRIPPED." Calibrating the automatic shut-off mechanism requires three steps. Refer to **Figure 7**.

1. Fill the container with liquid to the desired shut-off level. Leave at least three inches unfilled. Place the container in its normal position in the bottom of the refrigerator.
2. If the red CONTAINER FULL lamp on the outer front of the refrigerator is off, proceed to step 3. If the lamp is on, turn the black thumbwheel on the front of the weight table to the right until the lamp goes out.
3. Without touching any portion of the weight table, carefully turn the black thumbwheel to the left until the CONTAINER FULL lamp goes on. The calibration procedure is now complete.

Figure 7 Sampler Shut-off Calibration

Thumbwheel

Weight Table

Container filled with desired volume of water

Chapter 3 Programming Guidelines

INTRODUCTION

This chapter discusses the sampling features of the 3710R/3710VR Sampler in detail and covers the procedures used to program the sampler.

We recommend you have a sampler with you when you read this chapter. The most effective way to learn how to program the sampler is to read this chapter, get a sampler, and experiment. A few minutes in the office or laboratory spent in actually programming the sampler and observing its operation usually proves to be a worthwhile investment of time.

If you are already familiar with the sampling capabilities of the sampler, you may prefer to begin with *Programming Introduction* on page 15.

Chapter Organization

The following topics are discussed in this chapter:

- *Description of Sampling Operations*.
- *Types of Samples*.
- *Programming Introduction*.
- *Operating States*.
- *Introduction to the Programming Procedure*.
- *Using the Keypad to Respond to Displays*
- *Displays*.
- *Programming Examples*.
- *Configure Sequence*.
- *Extended Programming Mode*.
- *Foreign Languages and Metric Units of Measure*.
- *Standby State*.
- *Run State*.

DESCRIPTION OF SAMPLING OPERATIONS

This information serves to acquaint you with the sampler's operation. It introduces you to the types of sampling performed by the sampler and the terminology used to describe those capabilities.

SAMPLE EVENTS AND THE SAMPLING CYCLE

A sample event is the process of taking a sample. It includes the full sampling cycle. Although the cycle varies according to the program settings which define the sampling routine, the cycle described here follows the typical sequence. This information is presented here to provide you with a frame of reference for the remainder of this chapter.

1. A sample event is initiated when the interval since the previous sample has expired. For time based intervals, the samples are taken when the internal clock reaches the scheduled time of the sampling event. For flow-paced intervals, the interval is set to the programmed number of pulses received from a flow meter; the sample event begins when the pulses are counted down to zero.
2. The pump rotates in the reverse direction for the pre-sample purge. The pre-sample purge is an air purge of the suction line and inlet which clears the line of any accumulated debris. It also serves to purge residual liquid to avoid cross-contamination of samples.
3. The pump direction changes, pumping in the forward direction to fill the suction line up to the liquid detector.
4. After the suction line has been filled to the liquid detector and liquid has been detected, the sample volume measuring portion of the sampling cycle begins. The pump continues to rotate in the forward direction until the programmed volume of liquid has been delivered to the sample bottle. (In this manual, the amount of liquid delivered to the bottle is referred to as the "sample volume.")
5. The pump direction again changes, pumping in the reverse direction for the post-sample purge. Like the pre-sample purge, the post-sample purge is an air purge of the suction line. After the post-sample purge, the pump then shuts off.
6. The sample interval is reset and the cycle begins again at step 1.

TYPES OF SAMPLES

The sampler is designed to collect composite samples. As noted in **Chapter 1**, the sampler has two programming modes: basic and extended. The basic programming mode is used for conventional routines which include the types of sampling described in this section. A discussion of the types of sampling available through the extended programming mode is placed in *Types of Sampling Available Through the Extended Programming Mode* on page 15.

Composite sampling places individual sample volumes into a single container. Composite sample types can be characterized by sample pacing. Sample pacing refers to the interval between samples.

Types of Sample Pacing

There are two types of sample pacing: time-pacing and flow-pacing. In time-paced sampling, the interval between samples is a time interval. In flow-paced sampling, the interval between samples is a certain volume of liquid which has passed a measuring point in a flow stream. Flow-paced sampling requires a flow meter. (The sampler can be interfaced with Isco flow meters and certain non-Isco flow meters.) The flow meter measures the flow quantity and sends a pulse for every predetermined flow quantity to the sampler. The sampler totalizes the number of pulses received from the flow meter and collects a sample when the total reaches a programmed number.

Types of Sampling Available Through the Extended Programming Mode

The extended programming mode expands the variations of sample pacing. The extended features listed below are used in more complex sampling routines. Note, however, that the sampling capabilities described in *Types of Samples* are available in both the basic and the extended programming modes.

Nonuniform Time Intervals

The sampler, through the extended programming mode, can pace samples at nonuniform time intervals. With nonuniform time intervals, samples are taken at irregular intervals, rather than at equal intervals.

Nonuniform time intervals are typically used in run-off studies, often in conjunction with a Model 1640 Liquid Level Actuator. Nonuniform time intervals permit a number of samples to be collected at short intervals after a rainfall or other event occurs and remaining samples to be collected at widening intervals. For example, when the sampler is used with the actuator in a run-off study, the actuator turns the sampler on when the liquid level of the flow stream rises to contact the actuator's probe. With nonuniform time intervals, the sampler can collect samples frequently when the flow rate is highest and less frequently as the flow rate decreases.

Nonuniform times can also be used to simulate flow-paced sampling. When the flow rate varies predictably, using nonuniform time intervals allows you to take samples at equal flow volumes. As the flow rate increases, you can take samples at equal flow volumes by *decreasing* the time interval. As the flow rate decreases, you can *increase* the time interval.

When you use nonuniform times, the time interval between each sample event is individually programmable. You can enter nonuniform times in two ways: in minutes or in clock times. The first method, minutes, allows you to enter the number of sample events spaced at intervals defined in minutes: 12 samples at 5 minute intervals, 6 samples at 10 minute intervals, 4 samples at 15 minute intervals, and so on. You can also enter a specific clock time and date for each sample event: sample event 1 at 6:00 on April 20, sample event 2 at 6:30 on April 20, sample event 3 at 7:15 on April 20. You can specify up to 999 sample events spaced in nonuniform minutes, or up to 99 events specified as clock times. (If a routine requires a large number of nonuniform times, you can save the routine with the program storage feature so that you do not have to re-enter the nonuniform times again.)

Stops and Resumes

The Sampling Stops and Resumes feature, available in the extended programming mode, allows you to create an intermittent sampling schedule. You can program the sampler to stop the routine at a specific time. The routine can then be resumed at a later time.

Up to 12 stop times and 12 resume times can be entered. Stops and resumes can be used with time-paced and flow-paced routines and with routines programmed for nonuniform time intervals.

Programming Introduction

The sampler's programming process is self-prompting. Prompts displayed on the LCD step you through the programming sequence in a logical order, indicating the needed value or option. For example, the sampler will prompt you to enter settings for the interval between samples (select either time-paced or flow-paced intervals); sample volume in ml; and other operating controls. These settings can be changed at any time. The sampler will accept only appropriate values for the program settings and will reject any unacceptable values. If the unit is turned off or power is disconnected, the settings are retained in the sampler's memory by the lithium battery.

Operating States

There are three operating states: the standby state where the sampler is waiting for your instructions, the run state where the sampler is running a sampling routine, and the interactive state used to program the sampler. Each state serves a different purpose and is discussed separately.

STANDBY STATE

In the standby state, the sampler is waiting for your instructions. From standby, you can start a sampling routine, placing the sampler in the run state. You can also access the interactive state. The standby state is discussed on page 55.

RUN STATE

In the run state, the sampling routine is being executed and the sampler is operating under program control. While the sampling routine is executed, the LCD displays a number of messages to communicate the progress of the sampler through the routine. It reports the current time for time-paced routines and the remaining time or pulse count to the next sample. These messages vary according to the sampling routine; a representative set of messages is included with the programming examples. See *Basic Programming Procedure* on page 23 and *Programming Examples* on page 23. **Table 9** also lists run state messages.

As the routine progresses, the sampler creates a log of sampling results that records pertinent information about each sample event. The results include the time and date of each sample, the number of pump counts occurring until liquid is detected for each sample event, and any problems encountered. Results can be retrieved with the Display Status procedure, discussed on page 57. You can retrieve the results in the middle of a routine or when the routine is done. The results remain in the sampler's memory until you start the sampler again. More information on the run state can be found on page 60.

INTERACTIVE STATE

The interactive state allows you to program the sampler. The interactive state contains two branches: the program sequence and the configure sequence. **Figure 8** diagrams the structure of the interactive state. The program sequence is used to define the sampling routine; it allows you to enter the interval between samples, the number of samples, the sample size, and the start time. The configure sequence provides a number of setup options. Some configure options provide equipment specifications: bottle sizes, suction line diameters and lengths, and so on. For example, the sampler can be used with different sized bottles: 2.5 gallon or 4 gallon. You must enter the correct bottle size so that the sampler can calculate the range of sample volumes for a given number of samples. This information is used to prevent overfilling. Other options allow you to set the sampler's real time clock, calibrate the sampler, or enable the password program protection.

Programming Modes

The configure sequence also allows you to select either of the programming modes: basic or extended. The basic programming mode is used for conventional sampling routines. Using the basic programming mode, you can take samples at uniform time intervals or at flow pulse intervals. You can control the start time of the routine by entering a specific time and date or with the adjustable start time delay.

Extended Programming

The extended programming mode increases the number of available features; these features make more complex sampling routines possible. For example, you can use nonuniform time intervals, and create an intermittent sampling schedule with the Stops and Resumes feature. While all basic programming features are available in the extending programming mode, the less frequently used features have been separated into the extended mode to simplify the programming process.

Although the basic and extended program sequences vary in detail, both can be divided into three sections: Sample Pacing (interval between samples), Sample Volume (number of samples and sample size in ml), and Key Times (start times or, in the extended mode, stop and resume times). These sections are noted in the Program Sequence section of the diagram shown in **Figure 8**.

Configure Sequence

The program sequence and the configure sequence are interdependent. The selections you make in the configure sequence determine what settings will be available to you in the program sequence. When you select the extended programming mode, the program sequence is modified to accommodate the extended features by adding more input displays.

The extended programming mode not only extends the number of features available in the program sequence, it extends the number of configure options. When you select extended programming, for example, you can enable the Sampling Stop and Resumes and/or Nonuniform Times features so they can be used in the extended program sequence. When you select the basic programming mode, these configure options are not available to you. As in the programming sequence, less frequently used options have been separated to simplify the configuration process.

Most configure options are available to both programming modes. The configure sequence options are summarized in **Table 4**; each option is marked as available in both modes or available only in the extended mode. A detailed discussion of each configuration option is found in *Set Clock* on page 33 through *Exit Configuration* on page 41.

It is usually not necessary to change the configure option settings unless the sampling application changes significantly. The sampler is *always* programmed and configured: program and configure settings are maintained by the sampler's internal battery. In fact, the sampler is shipped with factory program and configure settings. It is configured for the basic program mode and for the bottle and suction line ordered with the sampler. For more information on factory settings, refer to *Run Diagnostics* on page 41, and **Tables 7** and **8**.

Figure 8 Interactive State Structure

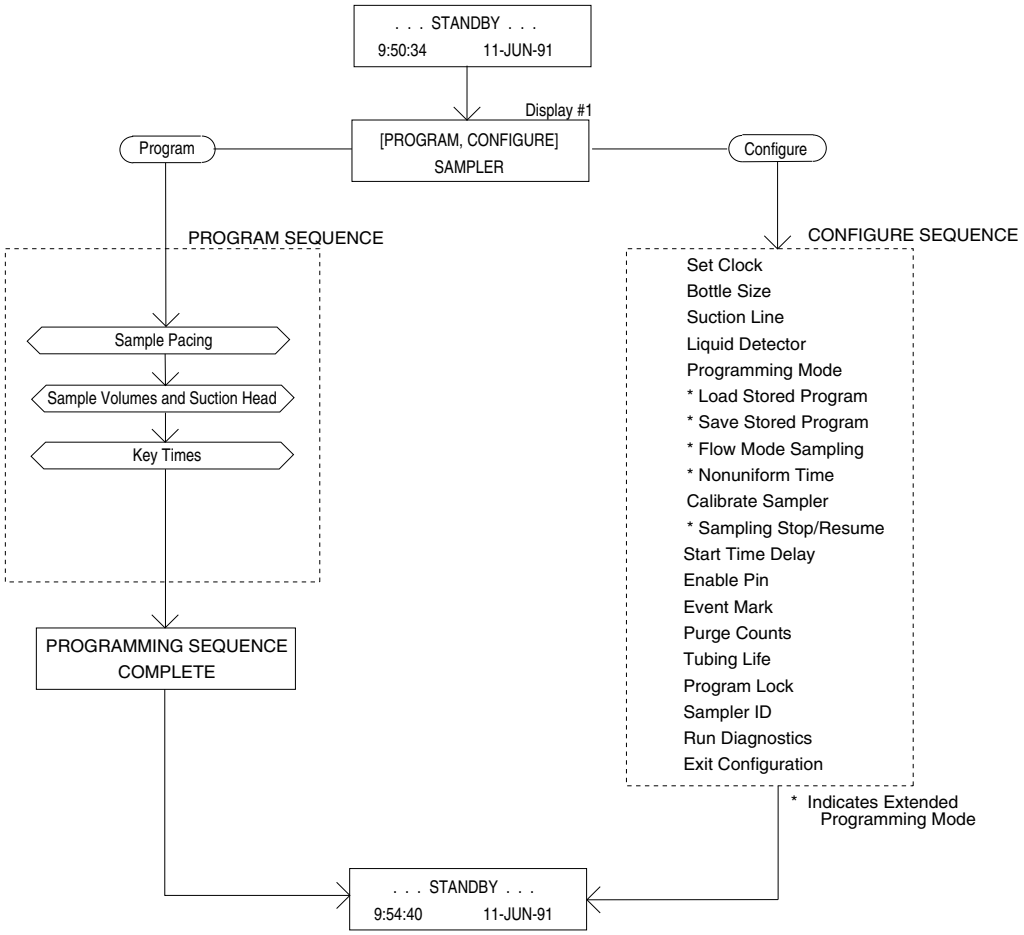

Table 4 Configure Option Functions

Configure Option	Availability		Function
	Basic	Extended	
Set Clock	✔	✔	Sets the sampler's real time clock.
Bottle Size	✔	✔	Sets the sampler for portable or refrigerated configuration. Sets the size of the composite bottle.
Suction Line	✔	✔	Sets the type of line (vinyl or Teflon), line diameter (1/4- or 3/8-inch), and line length (3 to 99 ft).
Liquid Detector	✔	✔	Enables/disables liquid detector, sets the number of rinse cycles (0 to 3), enables/disables the suction head entry, and sets the number of sampling retries (0 to 3).
Programming Mode	✔	✔	Sets the programming mode: basic or extended.
Load Stored Program		✔	Loads one of up to three previously saved sampling programs.
Save Current Program		✔	Saves current sampling program.
Flow Mode Sampling		✔	Directs sampler to take a sample at the beginning of a flow-paced program.
Nonuniform Time		✔	Directs sampler to accept nonuniform intervals as specific clock times or in minutes.
Calibrate Sampler	✔	✔	Enables/disables the calibration sequence.
Sampling Stop/Resume		✔	Enables/disables Sampling Stops and Resumes feature.
Start Time Delay	✔	✔	Sets the start time delay (from 0 to 9999 minutes). If no specific start time is entered in the program sequence, the program will use the entered start time delay. The delay is the amount of time which will elapse after the START SAMPLING key is pressed or after the sampler is enabled.
Enable Pin	✔	✔	Enables/disables the master/slave sampling. Directs the sampler to take a sample when disabled and/or enabled by an Isco Flow Meter or Liquid Level Actuator. Allows you to restart the sampling interval when the sampler is enabled.
Event Mark	✔	✔	Allows you to select one of four types of event marks.
Purge Counts	✔	✔	Adjusts the number of pre-sample and post-sample purge counts.
Tubing Life	✔	✔	Displays the pump tubing life information. Resets the tubing life count.
Program Lock	✔	✔	Enables/disables the password protection for input displays.
Sampler ID	✔	✔	Allows you to enter a 10 character ID number for the sampler.
Run Diagnostics	✔	✔	Tests the RAM, ROM, and pump. Allows for re-initialization of certain program and configure settings.

Introduction to the Programming Procedure

The procedure used to program the sampler follows the steps listed below. Note: Because the configuration settings determine portions of the program sequence and affect the accuracy of the sample, check the configuration settings before programming.

1. Determine the equipment you will be using with the sampler. You will need to know the capacity of the bottle, and the inside diameter, type (vinyl or Teflon), and length of the suction line. You will need this information when you verify and revise the configuration settings in step 2.
2. Check the configuration settings. From standby, access the interactive state. Select the configure sequence. Check the configuration settings, revising any settings as needed; select basic or extended programming mode. Return to the standby state.

   Example 1 shows you how to check and revise the configuration settings in the configure sequence. (We recommend you review *Keypad Description* on page 19 and *Displays* on page 20 before you work through the programming examples. These sections discuss the functions of the individual keys and how to use the keys when programming the sampler.)
3. Program the sampler. Again, from standby, access the interactive state. Select the program sequence. Enter the program settings for your routine. The sampler will prompt you through the programming process. When the process is completed, the sampler will automatically return to standby.

   A more detailed discussion of the programming procedure is on page 23. **Examples 2** through **4** demonstrate several types of sampling programs in the basic mode. Extended mode sampling programs can be found in **Examples 7** through **10**.
4. If desired, connect the sampler to a flow meter or other interfacing equipment. Start the sampler. As the routine is executed, the displays will report the sampler's progress. The programming examples in this manual conclude with the run state displays you should see for each sampling routine. When the routine is done, the sampler will return to standby.
5. Retrieve the filled sample bottle. If desired, use the Display Status procedure discussed on page 57 to examine the sampler's log of sampling results.
6. If you need to reprogram the sampler, follow this procedure from the beginning. If the sampler's current program is correct, start the sampling routine again.

Using the Keypad to Respond to Displays

Configuring and programming the sampler is as simple as responding to displays on the LCD with the keypad. The sampler will prompt you through many of the entries by presenting a question or a choice on the display. You must respond with the keypad. The LCD and the keypad are located on the sampler control panel, shown in **Figure 9**.

A summary of each key's function can be found on page 19. For a discussion of the displays presented on the LCD and the way you can use the keypad to interact with the sampler, see page 20.

Keypad Description

Keys are grouped together on the control panel to assist you in identifying related functions. Control keys are used to manually control the sampler; numeric keys are used to enter program values; programming keys are used to monitor the sampler's status and direct programming activities. In this manual, individual keys are indicated in SMALL CAPITAL LETTERS.

The individual key switches that make up the keypad provide tactile and audible feedback to assure you that the key switch has been successfully actuated. When a key switch is pressed, you can feel the deflection of the spring member in the switch; an audio indicator inside the sampler will beep once. The sampler has a 10-keystroke buffer which, in some cases, allows you to "type ahead" of the display.

Control Keys

Control keys allow you to turn the sampler on or off, start or resume the currently entered program, and control the sampler manually. The functions of the control keys are listed below

ON/OFF - Pressing the ON/OFF key when the sampler is off will turn the sampler on, reactivate the display, and place the sampler in the standby state. Pressing the ON/OFF key (when the sampler is on) will halt all sampling activity and will clear the display.

PUMP FORWARD - While in the standby state, pressing the PUMP FORWARD key will cause the pump to run continuously in the forward direction. The pump will run until the STOP key is pressed.

PUMP REVERSE - While in the standby state, pressing the PUMP REVERSE key will run the pump continuously in reverse. The pump will run until the STOP key is pressed.

STOP - The STOP key will stop the pump any time it is running. When the STOP key is pressed in the run state, the sampling routine will be halted, the sampler will be transferred to the standby state, and the "PROGRAM HALTED" message will be displayed. Pressing the STOP key while in the interactive state will access the display's reference number.

START SAMPLING - When in the standby state, pressing the START SAMPLING key will begin the sampling program. When entering a sampler ID, the key will type a space.

RESUME SAMPLING - When "PROGRAM HALTED" is displayed, pressing the RESUME SAMPLING key will cause the sampler to continue with the current sample program at the point at which it was halted. When entering a sampler ID, the key will type a period.

MANUAL SAMPLE - Pressing the MANUAL SAMPLE key will allow you to take a manual sample. The MANUAL SAMPLE key is valid in the standby state, the run state, and when calibrating the sampler. When entering a sampler ID, the key will type a dash (-).

Program Keys

The four program keys are used to enter program settings. Each key's function is listed below.

DISPLAY STATUS - While the sampler is in the standby or run state, pressing the DISPLAY STATUS key will allow you to view the program settings or the sampling results.

EXIT PROGRAM - Pressing the EXIT PROGRAM key while in the program sequence will return the sampler to standby. Pressing the EXIT PROGRAM key while in the run state will halt the program; the message "PROGRAM HALTED" will be displayed.

CLEAR ENTRY - When entering a number, the CLEAR ENTRY key can be used to return to the original entry.

ENTER/PROGRAM - Pressing the ENTER/PROGRAM key, while in the standby state, will cause the sampler to enter the interactive state. While at an input display, pressing the ENTER/PROGRAM key will accept an entered value or a blinking option and direct the sampler to proceed to the next step. Input displays are discussed on page 20.

Numeric Keys

The numeric keys consist of 10 digit keys, a LEFT ARROW key, and a RIGHT ARROW key. The digit keys are used to enter quantities. The arrow keys are used to move through the configure option list or program options.

LEFT ARROW - The LEFT ARROW key is used to select one of two or more program options displayed when the sampler is in the interactive state. When more than one numeric entry is displayed – for example, the hours and minutes of a time setting – the LEFT ARROW can be used to step back to a previously entered value. When entering a number, the LEFT ARROW can be used to erase the most recently entered digit. It is also used to step through display status information and configure option list.

RIGHT ARROW - The RIGHT ARROW key is used to select one of two or more program options displayed in an input display. It is also used to step through display status information and configure option list.

DISPLAYS

There are two types of displays: displays which communicate information about the sampler's status and displays which request input. In many cases, you must respond to a display with the keypad.

Informational Displays

Informational displays communicate information about the sampler's status. For example, when the sampler completes a sampling program, a display similar to the illustration below appears. It communicates the sampler's status ("DONE"), the number of samples taken (which will vary according to the program), and the current time and date.

```
DONE . . . 48 SAMPLES
10:32:34      14-JUN-91
```

Input Displays

Input displays can be identified easily because they contain a blinking word or number. The blinking word or number serves as a prompt for input and is said to be "selected." When the input displays shown below first appear, the word "PROGRAM" (display *a*) and the sample volume entry "250" (display *b*) will be blinking. Blinking words or numbers are represented in illustrations of displays with *Italic* characters.

```
[PROGRAM, CONFIGURE]
SAMPLER
```

a

```
SAMPLES VOLUMES OF
250 ml EACH (10 - 990)
```

b

Figure 9 3710R/3710VR Sampler Control Panel

Display Numbers

Nearly all input displays have a number assigned to them. The number is used to cross reference the input displays with a explanatory listing found in Appendix A - Display Index or in the *3710R/3710VR/3710FR Refrigerated Sampler Pocket Guide*. If you have a question about a given input display, you can easily locate the description of the display.

The display number can be accessed by pressing the STOP key when viewing the input display. To see the display number, press the STOP key, read the number from the display, then look up the corresponding number in *Display Index* on page 95 for information on that display. The display number for display *a* (above) is "1."

Displays with Choices

There are two types of input displays: displays which prompt you to make a choice (between time-paced and flow-paced sampling, for example) and displays which prompt for numeric input (sample volume, for example). In displays which prompt you to make a choice, you must select one of up to four alternatives placed in brackets. Display *a* (above) prompts you to select the program or the configure sequence. The choices, "PROGRAM" and "CONFIGURE," are placed in brackets.

When an input display prompting for a choice first appears, the blinking word indicates the currently selected choice. If the blinking word is acceptable, press the ENTER/PROGRAM key. If the blinking word is not acceptable, select the preferred choice by pressing the LEFT ARROW or RIGHT ARROW key until the preferred choice is blinking; then press the ENTER/PROGRAM key. The sampler will store the selected choice and advance to the next step.

When the display illustrated in *a* appears, the word "PROGRAM" will be blinking. If "PROGRAM" is acceptable, press the ENTER/PROGRAM key. If "PROGRAM" is not acceptable, press the LEFT ARROW or RIGHT ARROW key until "CONFIGURE" is blinking. Then, press the ENTER/PROGRAM key. The ENTER/PROGRAM key directs the sampler to advance to the next step.

Numeric Input Displays

A numeric input display will prompt for input by blinking the currently stored number. (In the display illustrated in *b*, the number "250" will blink to prompt you to enter a value.) If the blinking number is acceptable, it is not necessary to type the number again: pressing the ENTER/PROGRAM key will store the number and advance the program to the next step. To enter a new number, press the appropriate numeric keys, then press the ENTER/PROGRAM key.

The sampler will not accept a number that exceeds the allowable range of values placed in parentheses on the display. In illustration *b*, no less than 10 ml and no more than 990 ml can be entered as a sample volume. If an entered number exceeds the range, the sampler will emit a series of beeps and the original number will reappear. An acceptable value must be entered to advance to the next step.

Editing Numbers

The left arrow key and clear entry key can be used to edit numeric entries if they are used *after* you press a numeric key and *before* you press the enter/program key. The clear entry key will clear any typed number and the original number will reappear. The LEFT ARROW will erase the most recently typed number.

Some numeric input displays prompt for more than one value. In the illustration below, the prompt asks for five number entries: hours, minutes, day, month, and year. The LEFT ARROW key and RIGHT ARROW key can be used to move back and forth between each of the five entries. Individual entries can be changed, as discussed above. Pressing the RIGHT ARROW or ENTER/PROGRAM key on the *last* entry will store the values and advance to the next display.

```
HH:MM    DD-MM-YY
 12:33   14-06-91
```

Military Times

Times must be entered in military format: to set the sampler's clock to 3:30 PM, enter a time of 15:30. When the display above first appears, the first two digits, "12," will blink. To enter a new time, type in the new hour: "15." Store the hour entry and advance to minutes by pressing the ENTER/PROGRAM key. If the month or year entry does not need to be changed, accept the entry by pressing the RIGHT ARROW or ENTER/PROGRAM key. The LEFT ARROW key can be used to return to a previous position. Pressing the RIGHT ARROW or ENTER/PROGRAM key on the *last* entry, "91," will store the value and advance to the next display.

Exit Program Key

The user can exit an input display by pressing the EXIT PROGRAM key. If you use the EXIT PROGRAM key, the currently stored setting will not change.

PROGRAMMING EXAMPLES

The following examples demonstrate the steps used to check the configure option settings and program the sampler for several different sampling routines. The programming examples in this manual present each display in the order in which they appear on the sampler. They are designed to provide you with step-by-step procedures and are provided as models for you to use later when programming the sampler for your "real" applications. Each programming example concludes with the run state displays that appear while that routine is being executed. The run state displays can be used to monitor the sampler's progress through a routine.

There are two sets of examples. Examples for the basic programming sequence are provided in **Examples 2** through **4**. Because many of the features of the extended programming mode are affected by selections made in the configure sequence, examples for the extended programming sequence follow *Configure Sequence* on page 32. This section discusses each configure option separately. We recommend you become familiar with the basic programming mode procedure and examples before using the extended programming mode. Most of the procedures used in the extended programming mode duplicate those of the basic programming mode and are not repeated in the section on extended programming procedures.

Examples for both programming modes are accompanied by flow charts. These charts diagram the program sequence structure for each mode. **Figure 10** charts the Basic Programming Mode structure. **Figure 12** on page 45 charts the structure of the Extended Programming Mode. The charts are provided to act as a "map" to the programming process. Both charts are divided into sections – Sample Pacing, Sample Volume, and Key Times –which correspond to the steps listed in the procedure discussed below. Each chart contains the input displays used in the sequence. The input displays on each chart are labeled with their display number so they can be cross-referenced with the listing found in *Display Index* on page 95.

As noted earlier, the sampler is shipped with a test program and factory configuration settings. The examples in this manual assume that all factory settings are being used, that the sampler will use a 2.5 gallon (9400 ml) container and a 10 foot length of 3/8 inch vinyl suction line. The settings shipped with your sampler include settings for the size of bottle ordered and for the size, type, and length of suction line. When you check the configuration settings, make sure the settings match your equipment, not the example.

Most program and configure settings can be re-initialized to factory settings, if desired. **Tables 7** and **8** list factory settings. A discussion of the re-initialize option, located in the Run Diagnostics configure option is found on page 41. Instructions for re-initializing the sampler are also included as part of **Example 1**.

BASIC PROGRAMMING PROCEDURE

The steps needed to program the sampler in the basic mode follow the procedure outlined below.

1. Turn the sampler on with the ON/OFF key. The sampler always "wakes up" in the standby state. The "STANDBY" message will appear. If the sampler were turned off while running a routine, the "PROGRAM HALTED" message will be displayed. Both messages indicate the sampler is in standby.
2. Press the ENTER/PROGRAM key to access the interactive state. Select "PROGRAM." Refer to **Figure 10** for displays noted in steps 3 - 6.

   To return to a previous display when programming the sampler, press the EXIT PROGRAM key. The sampler will return to standby. Press the ENTER/PROGRAM key again to re-enter the interactive state. Continue to press the ENTER/PROGRAM key to scroll through the displays until you locate the display in question.
3. Enter the Sample Pacing settings. The sampler will prompt you to select either time- or flow-pacing. Depending on your selection, you will then be prompted to enter the time or flow pulse interval between samples.

   Note: If you will be using very short sample intervals, be sure the interval is longer than the duration of the sampling cycle. For truly representative sampling, the interval in either time- or flow-paced sampling should be longer than the duration of the sampling cycle. If the intervals are too short, no sample events will be missed, although some events will occur at improper times. The duration of the cycle can be determined by programming the sampler with the desired settings, pressing the MANUAL SAMPLE key, and simply timing the cycle.

   When programming the sampler for flow pacing, you must enter the number of pulses that make up the flow interval. If the flow meter has been set to send a pulse once every 1000 gallons, you can program the sampler to collect a sample once every 1000 gallons by entering a flow pulse interval of "1." To collect a sample once every 50,000 gallons, you would enter a sample interval of 50 pulses.

Figure 10 Basic Programming Mode: Program Sequence Structure

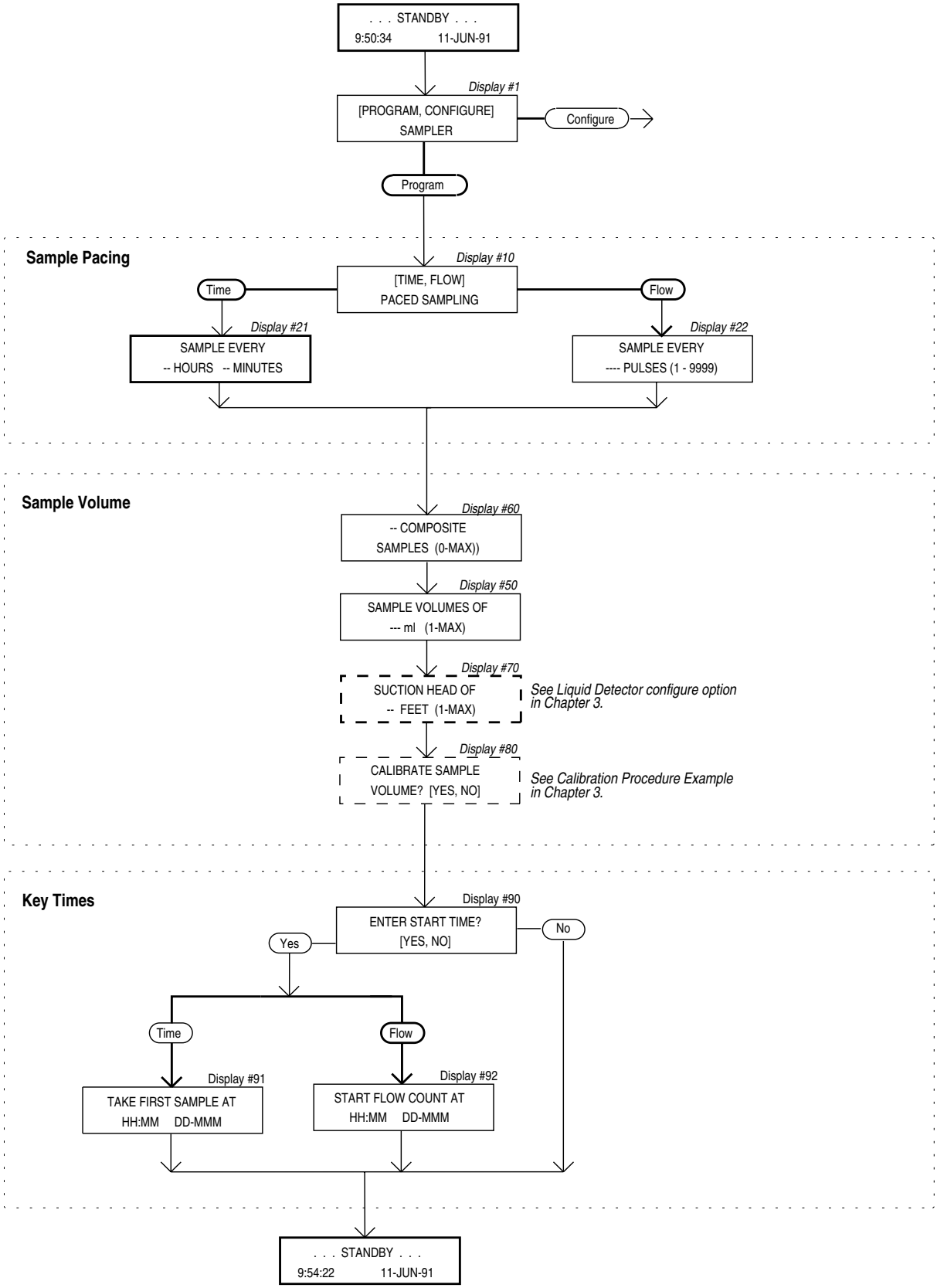

Calculating Flow Increment Between Samples on page 101 provides a discussion of some of the calculations needed when determining flow pulse intervals.

4. Enter the Sample Volume settings. The Sample Volume program section will always contain prompts for the number of samples and sample volume. Depending on the selections made in the configure sequence, it may also contain prompts for the suction head and for calibrating the sampler.

Sample Volume

The first display of the Sample Volume section, display #60, prompts you for the number of samples you want deposited in the bottle. Displays are shown in **Figure 10**. The acceptable range for number of samples is 0 to 999; the range is determined by the bottle size entered in the Bottle Size configure option. Enter 0 if you want the sampler to take samples indefinitely until the weight table terminates the sampling. If you enter a number greater than zero, the sampler will take samples until it has deposited that number of samples or the weight table terminates the sampling. The next display prompts you for the sample volume and indicates the range of acceptable volumes. The maximum range of sample volumes is dependent on the number of samples entered in the previous display; it will never exceed 9990 ml.

When entering the sample volume, the ± 10 ml sample volume repeatability should be kept in mind. Because the entered volume is a "nominal" value, it is prudent to calculate a total sample volume that is somewhat less than the volumetric capacity of the bottle as a safety factor. This will minimize the effects of cumulative error. Refer to *Bottle Size* on page 33 for notes on cumulative error and bottle size.

If you will be using a preservative in the sample bottle, be sure to take the volume of the preservative into account.

Suction Head

The sampler can be configured, through the Liquid Detector configure option, to add the suction head setting to the program sequence. The suction head display will appear after you enter the sample volume. However, when the head is unknown or variable, the suction head setting should be omitted by disabling the suction head setting in the Liquid Detector configure option. By disabling the setting, you allow the liquid detector to determine the operating suction head each time a sample is taken.

Calibration Settings

If you want to calibrate the sample volume, the calibration option must be enabled. To enable this option, select "ENABLE" in the Calibrate Sampler configure option. (Refer to *Calibrate Sampler* on page 38.) Enabling the option will add the calibration displays to the Sample Volume program section. The calibration displays are included in **Example 4**.

1. Enter the Key Times settings. In the basic programming mode, you will be asked if you want to enter a start time for the routine. If you select "YES," you will be prompted to enter a specific start time and date. If you select "NO," the sampler will use the start time delay. The start time delay can be set from 0 to 9999 minutes in the Start Time Delay configure option. (See *Start Time Delay* on page 38.) When you select "NO," the routine will start according to the delay setting in the Start Time Delay configure option. The time remaining between the time you press the START SAMPLING key and the next full minute will pass before beginning the delay countdown. In other words, with a start time delay of one minute, if you press the START SAMPLING key at 10:05:30, the routine will begin the one minute countdown at 10:05:00 and start the routine at 10:06:00.

   When the sampler is operating under factory configuration settings and running a time-paced program, the first sample will be taken at the start time for time-paced sampling. This is true whether you enter a specific start time and date, or if you use the start time delay.

   For flow-paced sampling, however, the flow pulse countdown will begin at the start time and the first sample will be taken when the countdown reaches zero. Refer to the discussion on the Flow Mode option in *Nonuniform Time* on page 38 for additional information.
2. The sampler will automatically be returned to standby state.
3. From standby, start the routine by pressing the START SAMPLING key. This places the sampler into the run state. If you happen to start the routine after the programmed start time, the sampler will allow you to reprogram the start time.
4. Use the run state displays to monitor the sampler's progress.

Example 1 Checking the Configure Option Settings

Before programming the sampler – especially if you are unfamiliar with the settings used in the previous routine, or if you think the settings have been changed – verify the configure option settings. You *must* change the settings if they do not match your bottle size or the suction line used with your unit. Entries suggested in this example configure the sampler for the 2.5 gallon (9400 ml) container and a 10 foot length of 3/8 inch vinyl suction line, enable the liquid detector, and select the basic programming mode. Procedures for re-initializing the program settings and configure options to factory settings are placed in steps 21 through 26.

Step No.	Display	Procedure
1	. . . STANDBY . . . 10:34:50 14-JUN-91	If the sampler is not already on, press the ON/OFF key to turn it on. The standby display shown here will appear. Press the ENTER/PROGRAM key to access the interactive state. The next display you'll see is shown in step *2*.
2	[PROGRAM, *CONFIGURE*] SAMPLER	Access the configure sequence by selecting "CONFIGURE." Select "CONFIGURE" by pressing the RIGHT ARROW key once. When "CONFIGURE" blinks, accept the selection by pressing the ENTER/PROGRAM key.
3	SELECT OPTION: (← →) *SET CLOCK*	The first option displayed is the Set Clock configure option. If the time displayed on the LCD in the standby message is not correct, reset the time with the Set Clock configure option. Access the Set Clock input display by pressing the ENTER/PROGRAM key.
4	HH:MM DD-MM-YY 10:35 14-06-91	Use this display to reset the time. Five entries are required. The LEFT ARROW and RIGHT ARROW keys can be used to move back and forth between each of the five entries. Use the arrow keys until the entry you want to change blinks. Type in the new time or date; press the ENTER/PROGRAM key to accept it. Pressing the RIGHT ARROW or ENTER/PROGRAM key on the *last* entry will store the values and advance to the next display.
5	SELECT OPTION: (← →) *BOTTLE SIZE*	To verify the Bottle Size settings, press the ENTER/PROGRAM key. The display shown in step *6* will appear.
6	[PORTABLE, *REFRIG.*] SAMPLER	Select "REFRIG." Isco 3700 Series portable and refrigerated samplers use the same controller. You would not need to select "PORTABLE" unless you moved the controller to a portable sampler.
7	BOTTLE VOLUME IS *9400* ml	Enter the bottle size here. Enter "9400" for the 2.5 gallon bottles, "15000" for 4 gallon bottle. Press the ENTER/PROGRAM key. If you enter a number that exceeds the maximum standard bottle size (15000), the message, "WARNING: STANDARD BTL VOLUME EXCEEDED!", will be displayed for a short time. The sampler will then prompt you to confirm the volume entered. This prompt is displayed in step *7*.
8	15001 ml! . . . ARE YOU SURE? [YES, *NO*]	Select "YES" if you want to use the non-standard bottle volume. Select "NO" if you want to revise the entry. The display shown in step *7* will reappear; use it to enter the revised bottle volume. Press the ENTER/PROGRAM key to accept the entry and advance to step *9*.
9	SELECT OPTION: (← →) *SUCTION LINE*	Press the ENTER/PROGRAM key at this display to access the Suction Line input displays shown in steps *10 - 12*.

Step No.	Display	Procedure
10	**SUCTION LINE ID IS [1/4, *3/8*] INCH**	Select "1/4" if you are using 1/4 inch suction line, "3/8" if you are using 3/8 inch suction line. Press the ENTER/PROGRAM key to accept the selection. If you select "1/4," you will not see the display shown in step *11*; instead you will be prompted for the suction line length, as shown in step *12*. (1/4 inch suction line is only available in vinyl, so you do not need to specify the line type.)
11	**SUCTION LINE IS [*VINYL*, TEFLON]**	This display appears when you have selected "3/8" in step *10*. Select "VINYL" if you are using vinyl suction line, "TEFLON" if you are using Teflon suction line. Press the ENTER/PROGRAM key to accept the selection.
12	**SUCTION LINE LENGTH IS *10* FEET (3 - 99)**	Enter the length of the suction line. The length should not include the tube coupling or the strainer. Press the ENTER/PROGRAM key to accept the entry and move to step *13*. If you change the suction line settings, the ". . . CALCULATING . . . PUMP TABLE VALUES" message will appear for a short time.
13	**SELECT OPTION: (← →) *LIQUID DETECTOR***	Press the ENTER/PROGRAM key at this display to access the Liquid Detector input displays shown in steps *14 - 17*.
14	**[*ENABLE*, DISABLE] LIQUID DETECTOR**	Select "ENABLE" to turn the Liquid Detector on, "DISABLE" to turn the Liquid Detector off. For the purposes of the following examples, select "ENABLE." Press the ENTER/PROGRAM key to accept the selection. The detector should normally be left enabled unless you suspect it is malfunctioning. If you disable the detector, you will be required to enter the suction head in the program sequence.
15	***0* RINSE CYCLES (0 - 3)**	This display appears when you have selected "ENABLE" in step *14*. For the purposes of this example, enter "0." Press the ENTER/PROGRAM key to accept the entry. Rinse cycles condition the suction line to reduce cross contamination.
16	**ENTER HEAD MANUALLY? [YES, *NO*]**	This display appears when you have selected "ENABLE" in step *14*. For the purposes of the following examples, select "NO" to omit the setting. Press the ENTER/PROGRAM key to accept the selection.
17	**RETRY UP TO *0* TIMES WHEN SAMPLING (0 - 3)**	This display appears when you have selected "ENABLE" in step *14*. For the purposes of this example, set the number of retries to "0." Press the ENTER/PROGRAM key to accept the entry. This setting determines the number of times the sampler will try to detect the presence of liquid for each sample event.
18	**SELECT OPTION: (← →) *PROGRAMMING MODE***	To verify the programming mode setting, press the ENTER/PROGRAM key.
19	**[*BASIC*, EXTENDED] PROGRAMMING MODE**	Select "BASIC." Press the ENTER/PROGRAM key to accept the selection.
20	↓ ↓	Scroll through the remaining options with the arrow keys. Use the techniques demonstrated above to change or verify the settings. If you want to re-initialize the configure and program settings to factory settings, follow the procedures given in steps *21 - 26*.

Step No.	Display	Procedure
21	**SELECT OPTION: (← →)** ***RUN DIAGNOSTICS***	To access the displays press the ENTER/PROGRAM key. The displays illustrated in steps *22 - 25* require no response. A discussion of the Run Diagnostics configure option is on page 41.
22	**SOFTWARE REVISION** **#4.5**	The sampler will display the software revision number for a short period.
23	**'RAM' PASSED TEST** **TESTING 'ROM'**	The software revision display will be replaced by the RAM and ROM test messages. A successful test is indicated by the messages “RAM PASSED TEST” and “ROM PASSED TEST.”
24	**ABCDEFGHIJKLMNOPQRST** **UVWXYZ[¥]^_`abcdefgh**	After successful RAM and ROM tests, the sampler will then test the LCD by first filling the display with solid rectangles and then printing the alphabet and other characters. Each character position in the display should contain a character.
25	**PUMP COUNT TEST** **OFF/ON = 105**	The next step tests the pump. During the test, the pump will run briefly and the display will indicate an “OFF/ON” number. The number should fall within the range of 50 to 200. A count near 100 is typical.
26	**RE-INITIALIZE?** **[YES, *NO*]**	If you want to re-initialize the settings, select “YES.” The entire RAM – with the exception of the current pump count total, bottle size settings, suction line settings, and sampler ID – will be re-initialized to factory settings. The sampler will automatically turn itself off as part of the re-initialization process. Select “NO” if you do not want to re-initialize the settings. Press the ENTER/PROGRAM key to accept the selection.

Example 2 Time-paced Sampling

The steps in this example program the sampler to take 250 ml samples every 15 minutes for a six hour period of time. The sampling routine is to start at 6:00 am.

When entering the program settings, you must enter the number of samples required before entering the sample volume. At four samples per hour, the 6 hour period would yield 24 samples. The total sample volume collected at the end of the routine would be 6000 ml (24 samples x 250 ml/sample), well within the capacity of the 9400 ml (2.5 gallon) bottle.

Step No.	Display	Procedure
1	**. . . STANDBY . . .** **5:34:50 14-JUN-91**	If the sampler is not already on, press the ON/OFF key to turn it on. The standby display shown here will appear. Press ENTER/PROGRAM to access the interactive state.
2	**[*PROGRAM*, CONFIGURE]** **SAMPLER**	Access the program sequence by selecting “PROGRAM.” Because “PROGRAM” will already be selected (blinking), press the ENTER/PROGRAM key to accept it and move to the next step.
3	**[*TIME*, FLOW]** **PACED SAMPLING**	To enter the interval between samples in time increments, select “TIME.” If “TIME” is already blinking, press the ENTER/PROGRAM key to accept the selection. If “FLOW” is blinking, press the LEFT ARROW key once so that “TIME” blinks. Then, press the ENTER/PROGRAM key to accept “TIME.”
4	**SAMPLE EVERY** **0 HOURS, *1* MINUTES**	This display requires two entries: one for the hours, one for the minutes. Enter “0” to set the hours at zero. Press ENTER/PROGRAM to accept the number “0” and move to the minutes entry shown in step *5*.

Step No.	Display	Procedure
5	SAMPLE EVERY 0 HOURS, *15* MINUTES	Enter “15” to set the minutes entry to 15. Press ENTER/PROGRAM to accept the entry.
6	*24* COMPOSITE SAMPLES (0-470)	Enter the number of samples to be collected: “24.” Press ENTER/PROGRAM to accept the entry.
7	SAMPLE VOLUMES OF *250* ml (10 - 1000)	Enter the sample volume: “250.” Press ENTER/PROGRAM to accept the entry.
8	ENTER START TIME? [*YES*, NO]	Select “YES” to enter the start time for the routine.
9	TAKE FIRST SAMPLE AT *6*:00 14-JUN	Enter the start time and date: 6:00 on June 14.
10	PROGRAMMING SEQUENCE COMPLETE	After this message is displayed briefly, the sampler will automatically return to the standby state.
11	. . . STANDBY . . . 5:38:50 14-JUN-91	After the sampler is properly installed, press the START SAMPLING key to run the program.
	Run State Displays	**Comment**
12	SAMPLE 1 OF 24 AT 6:00 5:39:43	The first line of this display indicates the number of the upcoming sample event and the total number of programmed samples. The second line indicates the scheduled time of the upcoming event followed by the current time.
13	SAMPLE 1 OF 24	When the time to the next sample event has elapsed and the sampler has initiated the sample event, the sampling cycle begins. When the pump reverses for the pre-sample purge, the second line disappears.
	SAMPLE 1 OF 24 PUMPING 250 ml	At the end of the pre-sample purge, the pump runs forward to deliver the sample, and the second line appears on the display. This display remains through the end of the post-sample purge.
14	SAMPLE 2 OF 24 AT 6:15 6:00:33	At the end of the sample event, the display changes to indicate the number and time of the next event. The current time is reported in the lower right corner.
15	SAMPLE 2 OF 24	The cycle is repeated for the remainder of the sampling routine.
	SAMPLE 2 OF 24 PUMPING 250 ml	
16	↓ ↓	
17	DONE . . . 24 SAMPLES 12:10:35 14-JUN-91	This display appears when the routine is completed. It reports the status of the routine (“DONE”), the total number of sample events, and the current time and date.

Example 3 Flow-paced Sampling

The steps in this example program the sampler to take 24, 250 ml samples at a flow-pulse interval of 10 pulses. The sampling routine is to start according to the start time delay. A discussion of the calculations needed to determine the estimated time interval of flow-paced samples, the number of flow pulses, and sample volume can be found in *Calculating Flow Increment Between Samples* on page 101.

Step No.	Display	Procedure
1	. . . STANDBY . . . 10:38:50 14-JUN-91	Press the ENTER/PROGRAM key to reenter the interactive state.
2	[*PROGRAM*, CONFIGURE] SAMPLER	Access the program sequence by selecting "PROGRAM."
3	[TIME, *FLOW*] PACED SAMPLING	Select "FLOW."
4	SAMPLE EVERY *10* PULSES (1 - 9999)	Enter "10" to set the pulse interval to 10 pulses. (Note: An entry of "0" will instruct the sampler to take samples until the weight table terminates the sampling routine.)
5	*24* COMPOSITE SAMPLES (0-470)	Enter the number of samples to be collected: "24."
6	SAMPLE VOLUMES OF *250* ml (10 - 1000)	Enter the sample volume: "250."
7	ENTER START TIME? [YES, *NO*]	Select "NO" to use the start time delay set in the configure sequence.
8	PROGRAMMING SEQUENCE COMPLETE	After this message is displayed briefly, the sampler will automatically return to the standby state.
9	. . . STANDBY . . . 10:40:23 14-JUN-91	After the sampler is properly installed, press the START SAMPLING key to run the program.
	Run State Displays	**Comment**
10	START AT 10:42 14-JUN 10:40:35 14-JUN-91	This display appears during the start time delay countdown.
11	SAMPLE 1 OF 24 AFTER 10 PULSES	The first line of this display indicates the number of the upcoming sample event and the total number of programmed samples. The second line indicates the number of pulses remaining to the sample event.
12	SAMPLE 1 OF 24 AFTER 9 PULSES	This display indicates that one pulse has been received. The pulse countdown will continue until the next sample event.
	↓ ↓	
13	SAMPLE 1 OF 24	When the flow countdown reaches zero and the sampler has initiated the sample event, the sampling cycle begins. When the pump reverses for the pre-sample purge, the second line disappears.

Step No.	Run State Displays	Comment
	SAMPLE 1 OF 24 PUMPING 250 ml	At the end of the pre-sample purge, the pump runs forward to deliver the sample, and the second line appears on the display. This display remains through the end of the post-sample purge.
14	SAMPLE 2 OF 24 AFTER 10 PULSES	At the end of the sample event, the display changes to indicate the number and time of the next event.
15	SAMPLE 2 OF 24	The cycle is repeated for the remainder of the sampling routine.
	SAMPLE 2 OF 24 PUMPING 250 ml	
16	↓ ↓	
17	DONE . . . 24 SAMPLES 6:10:35 15-JUN-91	This display appears when the routine is completed. It reports the status of the routine ("DONE"), the total number of sample events, and the current time and date.

Example 4 Calibration Procedure

This example demonstrates the method used to calibrate the sampler for a 200 ml sample volume. The Calibrate Sampler configure option must be enabled in the configure sequence before the calibration displays shown below will appear.

Even without calibrating, the sampler will deliver accurate sample volumes. If your sample volumes vary significantly with the entered values, check the suction line first. Be sure the line slopes continuously downhill and is draining completely after each pumping cycle. Then, check the suction line entries in the configure sequence to see that they are accurate. The calibration procedure is intended to be for "fine tuning" only.

After you enter the sample volume actually delivered, as shown in step 8, all subsequent sample volumes delivered will be adjusted to correct for the difference between the expected sample volume and the actual volume entered. Clear the adjustment by changing a suction line entry in the Suction Line configure option or by re-initializing the sampler.

Because the sample volume can be calibrated to ± 10 ml, a graduated cylinder should be used to facilitate measurement. A graduated cylinder is available from the factory. Refer to the *Accessories List* on page 93 for details.

The calibration pump cycle will include rinse cycles and retries, if the sampler is configured to perform them (*Liquid Detector* on page 33). This insures that the calibration procedure includes the pump cycle used while running the sampling program.

Step No.	Display	Procedure
1	. . . STANDBY . . . 9:34:50 14-JUN	Press ENTER/PROGRAM to access the interactive state.
2	[*PROGRAM*, CONFIGURE] SAMPLER	Access the program sequence by selecting "PROGRAM."

Step No.	Display	Procedure
3	[TIME, FLOW] PACED SAMPLING	Step through the program until the "CALIBRATE SAMPLER?" input display appears (step *5*).
4	↓ ↓	Other program sequence displays.
5	CALIBRATE SAMPLER? [*YES*, NO]	Select "YES."
6	PRESS MANUAL SAMPLE KEY WHEN READY . . .	Before pressing the MANUAL SAMPLE key, make sure a collection container is underneath the pump tube.
7	. . . MANUAL SAMPLE . . . PUMPING 200 ml	The sampler will deliver the programmed sample volume.
8	*200* ml VOLUME DELIVERED	Measure the actual volume delivered and enter that value here.
9	CALIBRATE SAMPLER? [YES, *NO*]	Repeat the procedure if desired by selecting "YES." When you are satisfied with the calibration, select "NO." Under normal conditions, you should not need to repeat the procedure.
10	↓ ↓	Other program sequence displays.
11	. . . STANDBY . . . 9:39:50 14-JUN-91	The sampler will return to standby. Press the START SAMPLING key to run the program.

CONFIGURE SEQUENCE

The configure sequence provides a number of setup options. Some options enable sampling features, some provide reference data, and others affect run state operations.

Example 1 shows the procedure used to access the configure sequence. (When you see a "SELECT OPTION: (← →)" display, you are in the configure sequence.) Each option uses at least two displays. The first display lists the option name. The second and any additional displays are input displays. To access an input display, press the ENTER/PROGRAM key while the desired option name is displayed. Once you've accessed the input display, use the keypad to enter numbers and make choices as described in *Keypad Description* on page 19 through *Displays* on page 20.

Pressing the EXIT PROGRAM key in the configure option list will return the sampler to standby. Pressing the EXIT PROGRAM key in a configure option *input display* will return you to the list of configure options without changing the display's setting.

By pressing the LEFT ARROW or RIGHT ARROW key at the "SELECT OPTION" display in the configure sequence, you can scroll through the list of configure options without viewing each input display. If you are interested in only one or two options, you can use this method to locate the option of interest quickly.

Each option is discussed below in the order in which it appears when configuring the sampler. Individual input displays and their settings, are discussed separately within the discussion of each option. The name of the setting is placed in the left margin so you can identify each topic. Illustrations of displays are not included in each discussion; however, each discussion includes the display number, should you need to refer to display listing in *Display Index* on page 95.

SET CLOCK

The Set Clock option is used to synchronize the sampler's clock with real time. Times must be entered in military time: 9:30 am would be entered as 9:30, 9:30 pm would be entered as 21:30. When the year entry is accepted, the seconds will be reset to zero. (*Display #210*)

BOTTLE SIZE

The Bottles Size option is used to enter the bottle volume. The option uses two input displays:

- the first display allows you to specify a portable or refrigerated sampler.
- the second display sets the bottle volume.

The sampler uses the bottle size entry to calculate the range of acceptable values in the sample volume input display. It also uses the bottle size to check for probable overfill when the sampler is programmed for flow-paced sampling.

Portable or Refrigerated Sampler

Because the 3710 Series portable and refrigerated samplers use the same control box, you must specify the type of unit. The sampler will be shipped with this setting as "REFRIGERATED." This setting is not changed when you re-initialize the settings. You should not specify "PORTABLE" unless you move the control box to a portable sampler. (*Display #220*).

Bottle Volume

Table 5 lists Isco's standard bottle sizes for composite samplers. When using the standard bottles, enter the bottle volume setting listed in the third column of the table. The recommended bottle sizes have been adjusted downward. Using the lower, adjusted volume helps prevent overfilling. If you are using a non-standard bottle, enter a bottle volume smaller than the actual bottle capacity. This will help prevent overfilling. (There are approximately 3785 ml per gallon.)

Cumulative Error

The sample accuracy is the greater of 10% of the sample volume or 20 ml and is repeatable to ± 10 ml. Since samples of 150 ml can vary by 10% or ± 15 ml, the cumulative error for 24 samples would be ± 360 ml. If the sampler consistently places 24 sample volumes of 165 ml (150 ml + a 10% variation of 15 ml) in a 3800 ml bottle, the total volume deposited would be 3960 ml, overfilling the bottle by 160 ml. Again, to avoid possible overfilling, enter a bottle volume that is less than the actual bottle capacity.

Table 5 Standard Bottle Volume Settings

Bottle Material	Bottle Size	Bottle Volume Setting
Glass Or Polyethylene	2.5 gal	9400
Polyethylene	4 gal	15000
Polyethylene	5.5 gal	20800

SUCTION LINE

The Suction Line configure option is used to configure the sampler for the type (vinyl or Teflon), diameter, and length of the suction line used. The volumetric delivery varies with line diameter, type, and length, so it is important that these settings be entered accurately. An incorrect setting will impair the accuracy of the sample volume. These settings are also used to determine the number of post-sample purge counts. It is important to have sufficient counts to completely clear the line.

If you change the current suction line settings, the ". . . CALCULATING . . . PUMP TABLE VALUES" message will appear for a short time. Because the volumetric delivery of the sample varies with the diameter, type, and length of the suction line; the sampler must revise the internal pump tables. The tables are used as reference for the electronic pump count for sample delivery.

There are three types of suction lines available for use with the sampler: ¼ inch vinyl, ⅜ inch vinyl, and ⅜ inch Teflon. If you specify ¼ inch line, the sampler will prompt you for the line length immediately. If you specify ⅜ inch line, the sampler will prompt you to specify vinyl or Teflon before prompting for the line length. (*Display #'s 230 and 231*).

The sampler will accept suction line lengths of 3 to 99 feet. When measuring the line, do not include the tube coupling or the strainer in the measurement. The line should be cut to even foot lengths. (*Display #232*).

LIQUID DETECTOR

The Liquid Detector configure option is used to turn the liquid detector on or off, set the number of rinse cycles, add a suction head setting to the program sequence, and set the number of sampling retries should the suction line become clogged. The option uses four input displays. Each display is discussed below.

Enable/Disable Detector

The recommended setting for the Enable/Disable Detector option is "ENABLE." The sampler determines the delivered sample volume suction head by counting revolutions of the peristaltic pump rotor. The volume of liquid delivered by one revolution of the pump rotor is a function of the suction head; as the suction head increases, the volume delivered by one revolution of the pump rotor decreases.

By enabling the detector, the sampler can accurately determine the operating suction head. It does not have to rely on a programmed suction head value, but can instead begin its volume delivery count when liquid is detected. This minimizes inaccuracies that can occur in changing head conditions, or when measurement of the suction head is difficult to determine accurately.

The disable option is provided should the detector or its associated circuitry become suspect. If the detector is disabled, the manual suction head setting (*Display #70*) is automatically added to the Sample Volume program section in the program sequence. If the detector is disabled, the sampler will use a calculated number of pump counts based on the suction head entry to deliver the correct sample volume. The sampler will operate at diminished accuracy with the detector disabled. (*Display #240*).

Rinse Cycles

The Rinse Cycle setting is available only when the detector is enabled. It is used to set the number of suction line rinses, from 0 to 3. Rinses are used to condition the suction line to reduce cross contamination. During a rinse cycle, the pump draws liquid up through the line until it is detected by the liquid detector. At that point, the pump reverses to purge the line. This cycle is repeated according to the number of rinse cycles entered. (*Display #241*).

Rinse cycles contribute to the wear on pump tubing; therefore, if you use rinse cycles, it may be necessary to replace the tubing more frequently. The Tubing Life configure option, (page 40*)* allows you to monitor pump tubing wear.

Enter Head Manually

Entering the head manually is available as an option when the detector is enabled and allows you to add the suction head entry (*Display #70*) to the program sequence. When the detector is disabled, the Suction Head entry is automatically added to the program sequence. By disabling the suction head setting, you allow the liquid detector to determine the operating suction head each time a sample is taken. Using the Suction Head entry in conjunction with the liquid detector, *when the head is stable and known accurately*, further increases accuracy of the delivered volume. When the head is variable or unknown, you should select "NO" because an incorrect head setting diminishes the delivered volume accuracy. (*Display #242*).

Sampling Retries

The Sampling Retries option is available as an option when the detector is enabled. It sets the number of times, from 0 to 3, the sampler will try to detect liquid in the line before skipping the sample. This option can be used when sampling liquid with a high concentration of solids which tend to clog the suction line or the strainer. The sampler will also retry the rinse cycle when you are using the Sampling Retry option. (*Display #243*).

Programming Mode

The Programming Mode option allows you to specify either the basic or extended programming mode. The basic programming mode is used for conventional routines; the extended programming mode can be used for either conventional or more complex routines.

Table 6 summarizes the sampling features according to the programming mode in the program sequence. **Table 4** summarizes the features available in the configure sequence. (*Display #250*).

Table 6 Sampling Capabilities available through the Program Sequence

Program Sequence	Availability		Feature
	Basic	Extended	
Pacing:			
Time-pacing: Uniform Time Intervals	✔	✔	Samples taken at regular time intervals from 1 minute to 99 hours, 59 minutes.
Time-pacing: Nonuniform Clock Time Intervals		✔	Samples taken at irregular time intervals by specifying the time and date of each sample. Dates can be entered up to one month in advance of the current date.
Time-pacing: Nonuniform Intervals in Minutes		✔	Samples taken at irregular time intervals by specifying the amount of time in minutes between each sample. Intervals can be entered from 1 to 99 minutes.
Flow-pacing	✔	✔	Samples taken at regular flow intervals. The sampler will totalize flow intervals of 1 to 9999 pulses.
Volumes and Accuracy:			
Number of samples	✔	✔	Number of samples needed to complete the routine. A specific number of samples (up to 999) can be entered or the sampler can be programmed to terminate the routine with the float shut-off.
Sample Volume	✔	✔	Volumes from 10 to 9990 ml can be entered.
Suction Head	✔	✔	Suction heads from 1 to 20 feet can be entered.
Calibration	✔	✔	Sample Volumes can be calibrated, if desired.
Key Times:			
Start Times	✔	✔	Specific start times can be entered for both time-paced and flow-paced routines. If no start time is entered, the Start Time Delay will be used.
Stop/Resume Times		✔	Intermittent sampling can be performed by defining sampling stop and resume times. Up to 12 stop times and 12 resume times can be entered.

LOAD STORED PROGRAM

The Load Stored Program option allows you to load one of up to three sampling programs which have been previously saved with the Save Current Program configure option, discussed on page 37. After loading a program, the sampler will adjust the time settings to current times and dates. Check the settings before starting the program to be sure they are appropriate for your application. (*Display #255*)

The sampler is shipped from the factory with four programs: the current program and three stored programs, numbered from 1 to 3. All four programs contain the factory default program settings. Unless you have previously saved a program under one of the program numbers, loading a program will replace the current program with the factory default settings. When you re-initialize the sampler, all four programs return to the default program settings.

The following example shows you how to load a stored program.

Example 5 Loading a Stored Program

Step No.	Display	Procedure
1	. . . STANDBY . . . 10:34:50 14-JUN-91	Press ENTER/PROGRAM to access the interactive state.
2	[PROGRAM, *CONFIGURE*] SAMPLER	Access the configure sequence by selecting "CONFIGURE."
3	SELECT OPTION: (← →) *SET CLOCK*	Press the LEFT ARROW or RIGHT ARROW key to scroll through the configure options. The first option displayed is the Set Clock configure option.
4	↓ ↓	
5	SELECT OPTION: (← →) *PROGRAMMING MODE*	You can load a stored programmed only when the sampler is configured for the extended programming mode. To verify the programming mode setting, press the ENTER/PROGRAM key.
6	[BASIC, *EXTENDED*] PROGRAMMING MODE	Select "EXTENDED." Press the ENTER/PROGRAM key to accept the selection.
7	SELECT OPTION: (← →) *LOAD STORED PROGRAM*	Press ENTER/PROGRAM to access the Load Stored Program configure option.
8	LOAD PROGRAM [*#1*, #2, #3, NONE]	Select the number of the program you want to load. Select "NONE" when you do not want to load a program.
9	SELECT OPTION: (← →) *SAVE CURRENT PROGRAM*	When the sampler has loaded the program, it will display the next configure option. When you are done configuring the sampler, press EXIT/PROGRAM to return to Standby.
10	. . . STANDBY . . . 10:37:23 14-JUN-91	After the sampler is properly installed, press the START SAMPLING key to run the program.

SAVE CURRENT PROGRAM

The Save Current Program option allows you to assign up to three sampling routines a number and store them. This option eliminates the need to reprogram the sampler for recurrent routines. Only the program settings are saved; if different routines require different configurations, the sampler must be reconfigured for each routine. For example, if the sampler is used at two sites, each requiring a specific sampling routine and different suction line lengths; the sampling routines can be stored for each site, but the suction line length settings must be reentered each time the line changes. (*Display #260*).

The sampler is shipped from the factory with four programs: the current program and three stored programs, numbered from 1 to 3. All four programs contain the factory default program settings. Saving a program will replace the default program with the current settings. Re-initializing the sampler will restore the default program settings. The default program settings are listed in **Table 7**.

Note: saving a program will overwrite a program saved earlier under the same number. Settings for the current program can be viewed with the Display Status procedure.

The following example shows you how to save a current sampling program.

Example 6 Saving a Current Program

Step No.	Display	Procedure
1	**. . . STANDBY . . .** **10:34:50 14-JUN-91**	Press ENTER/PROGRAM to access the interactive state.
2	**[PROGRAM, *CONFIGURE*]** **SAMPLER**	Access the configure sequence by selecting "CONFIGURE."
3	**SELECT OPTION: (← →)** ***SET CLOCK***	Press the LEFT ARROW or RIGHT ARROW key to scroll through the configure options. The first option displayed is the Set Clock configure option.
4	↓ ↓	
5	**SELECT OPTION: (← →)** ***PROGRAMMING MODE***	You can save the current program only when the sampler is configured for the extended programming mode. To verify the programming mode setting, press the ENTER/PROGRAM key.
6	**[BASIC, *EXTENDED*]** **PROGRAMMING MODE**	Select "EXTENDED." Press the ENTER/PROGRAM key to accept the selection.
7	**SELECT OPTION: (← →)** ***LOAD STORED PROGRAM***	Press the RIGHT ARROW key to skip the Load Stored Program configure option.
8	**SELECT OPTION: (← →)** ***SAVE CURRENT PROGRAM***	Press the ENTER/PROGRAM key to access the Save Current Program configure option.
9	**SAVE PROGRAM AS** **[#1, *#2*, #3, NONE]**	Select the number you want to use as the program "name." Select "NONE" when you do not want to save a program. When the sampler has saved the program, it will display the next configure option. When you are done configuring the sampler, press EXIT/PROGRAM to return to Standby.
10	**. . . STANDBY . . .** **10:37:23 14-JUN-91**	When the sampler is properly installed, press the START SAMPLING key to run the program.

FLOW MODE SAMPLING

The Flow Mode Sampling option is used to direct the sampler to take a sample at key times in a flow-paced sampling program.

Sample at Start Time

If you select "YES," the first sample will be taken at the start time entered in the program sequence. If you select "NO," the first sample is delayed until the number of flow pulses, set in the program sequence, have been counted down to zero. (*Display #270*).

NONUNIFORM TIME

The Nonuniform Time option specifies the method in which nonuniform intervals are to be entered in the extended program sequence (*Display #'s 26 or 27*). If you select "CLOCK-TIME," you will be able to enter a specific time and date for each sample event when entering settings in the program sequence. If you select "MINUTES," you will be able to enter nonuniform intervals in minutes. (*Display #280*).

When you enter nonuniform times, you will be prompted to enter the number of nonuniform samples before you enter the nonuniform times. This display replaces the Number of Composite Samples display (*Display #60*) in the program sequence.

CALIBRATE SAMPLER

The Calibrate Sampler option is used to add or remove the calibration settings to the program sequence. If you select "ENABLE," the calibration displays will be added to the program sequence and you will be able to precisely calibrate the sample volumes. (*Display #290*).

SAMPLING STOP/RESUME

The Sampling Stop/Resume configure option allows you to add stop and resume settings (*Display #'s 100, 101, and 102*) to the program sequence. The Stop/Resume settings appear in the key time section of the program sequence. (You can enter up to 24 times: 12 stop times and 12 resume times.) For example, the Stop/Resume option allows you to define a sampling routine which will take samples at intervals of 15 minutes between 6:00 am to 8:00 am and between 4:00 pm to 6:00 pm. The stop and resume entries for this routine are shown in **Example 7**.

Enable/Disable

Select "ENABLE" to add the stops and resume settings to the program sequence. (*Display #300*).

Sample at Stop

The Sample at Stop setting is used to direct the sampler to take a sample at stop times. (*Display #301*).

Sample at Resume

The Sample at Resume setting is used to direct the sampler to take a sample at resume times. (*Display #302*).

START TIME DELAY

The Start Time Delay option is used to set the amount of time in minutes, between the time you press the START SAMPLING key and the time the sampling routine is initiated. The sampler's response varies according to specific entries: "0," "1," and entries greater than 1.

---MINUTE DELAY
TO START (0 - 9999)

An entry of "0" eliminates the delay to start time; the start time occurs the moment you press START SAMPLING. For example, if you press START SAMPLING at 10:32:15, the sampler will initiate a time-paced sample event at 10:32:15.

However, the sampler will start clocking time intervals at the beginning of the minute (HH:MM:**00**) of the first sample event. If a sampling routine requires 10 minute intervals and you pressed START SAMPLING at 10:32:15, the sampler would begin the time interval at 10:32:00. It would initiate the second sample event at 10:42:00. The sampler would begin the flow interval at 10:32:15 for flow-paced routines.

If you enter a start time delay of "1," the sampler will begin the routine at the beginning of the next minute. Thus, if you pressed START SAMPLING at 10:32:15, the sampler would initiate the sample event at 10:33:00. The sampler would begin time and flow intervals at 10:33:00. If you enter a start time delay of "2," the sampler would begin time or flow intervals at 10:34:00. (*Display #310*).

Note: If you enter a start time, the sampler will disregard the start time delay. The sampler will use the start time delay setting when you do not enter the start time in the program sequence. Care must be taken when using a start time delay of greater than zero when the sampler is being inhibited by another sampler, a 3200 or 4200 Series Flow Meter, a 4100 Series Flow Logger, or a Liquid Level Actuator. Refer to *Enable Pin* on page 39.

Enable Pin

The Enable Pin option allows you to program the sampler's response to a device controlling pin F of the flow meter connector: for example, a 3200 Series Flow Meter or the Model 1640 Liquid Level Actuator. There are four Enable Pin setup options: Sample Upon Disable, Sample Upon Enable, Reset Sample Interval, and Inhibit Countdown.

Sample Upon Disable

When you are using an Isco Flow Meter, Flow Logger, or Liquid Level Actuator, "SAMPLE UPON DISABLE?" allows you to direct the sampler to take a sample as soon as the sampler is disabled through pin F. A response of "YES" will cause the sampler to take a sample when the pin is disabled; a response of "NO" will prevent the sampler from taking a sample. (*Display #321*).

The sampler determines an enable or disable condition by monitoring the voltage on pin F. High voltage is interpreted as an enable signal. Low voltage or ground is interpreted as a disable signal.

Sample Upon Enable

When you are using an Isco Flow Meter, Flow Logger, or Liquid Level Actuator, "SAMPLE UPON ENABLE?" allows you to direct the sampler to take a sample as soon as the sampler is enabled through pin F. A response of "YES" will cause the sampler to take a sample when the pin is enabled. A response of "NO" will prevent the sampler from taking a sample when the pin is enabled. (*Display #322*).

Reset Sample Interval

"RESET SAMPLE INTERVAL?" is used to control the time or flow pulse countdown. If you select "YES," a full sample interval will begin when pin F is enabled. If you select "NO," the interval will not be reset when the sampler is enabled.

The interval is then governed by settings entered in the "INHIBIT COUNTDOWN?" option. If you are sampling on a time-paced basis and wish to synchronize all sampling with real time, do not reset the sample interval. (*Display #323*).

Inhibit Countdown

"INHIBIT COUNTDOWN?" is only applicable when you respond "NO" to "RESET SAMPLE INTERVAL?" The Inhibit Countdown option is used to control the countdown while the sampler is disabled. Select "YES" to freeze the countdown to the next sample. The count will resume when the sampler is enabled. Select "NO" to allow the countdown to continue while the sampler is disabled. (*Display #324*).

Event Mark

The Event Mark option configures the sampler to send an event mark to an interfaced flow meter or other equipment. The sampler will supply a variable duration pulse of up to 700 mA at 12 V on pin E of the flow meter connector. Four types of signals can be sent:

- a pulse at the beginning of the pre-sample purge.
- a pulse at the beginning of forward pumping only.
- continuous during the entire pump cycle.
- continuous during forward pumping only.

The type of signal selected from the Event Mark configure option affects the event mark signal on pin E. In **Figure 11A** a pulse signal is sent at the beginning of the pre-sample purge.

In **Figure 11B** a pulse signal is sent during the sample volume delivery portion of the sample event. In **Figure 11C** a continuous signal is sent during the entire pump cycle. In **Figure 11D** a continuous pulse is sent for the duration of the sample volume delivery.

Continuous/Pulse Signal

The Continuous/Pulse setting is used to select either continuous or pulse signals. Pulse signals are three seconds in duration; continuous signals are three seconds or longer and depend on the setting and the pump cycle. (*Display #330*).

Continuous Signal Timing

The Pump Cycle/Fwd Pumping settings will appear when you have selected "CONTINUOUS SIGNAL." Select "PUMP CYCLE" when you want a continuous signal transmitted during the entire pump cycle, from the beginning of the pre-sample purge to the end of the post-sample purge. Select "FWD PUMPING" when you want a continuous signal transmitted while the pump is delivering a sample volume. (*Display #331*).

Pulse Signal

The Pulse Signal setting will appear when you have selected "PULSE." Two options are available. The first option, "PURGE," is used to send a pulse at the beginning of the pre-sample purge. The second option, "FWD PUMPING," is used to send a pulse at the beginning of the sample delivery when the pump is running forward. (*Display #332*).

Figure 11 Event Mark Signal Output

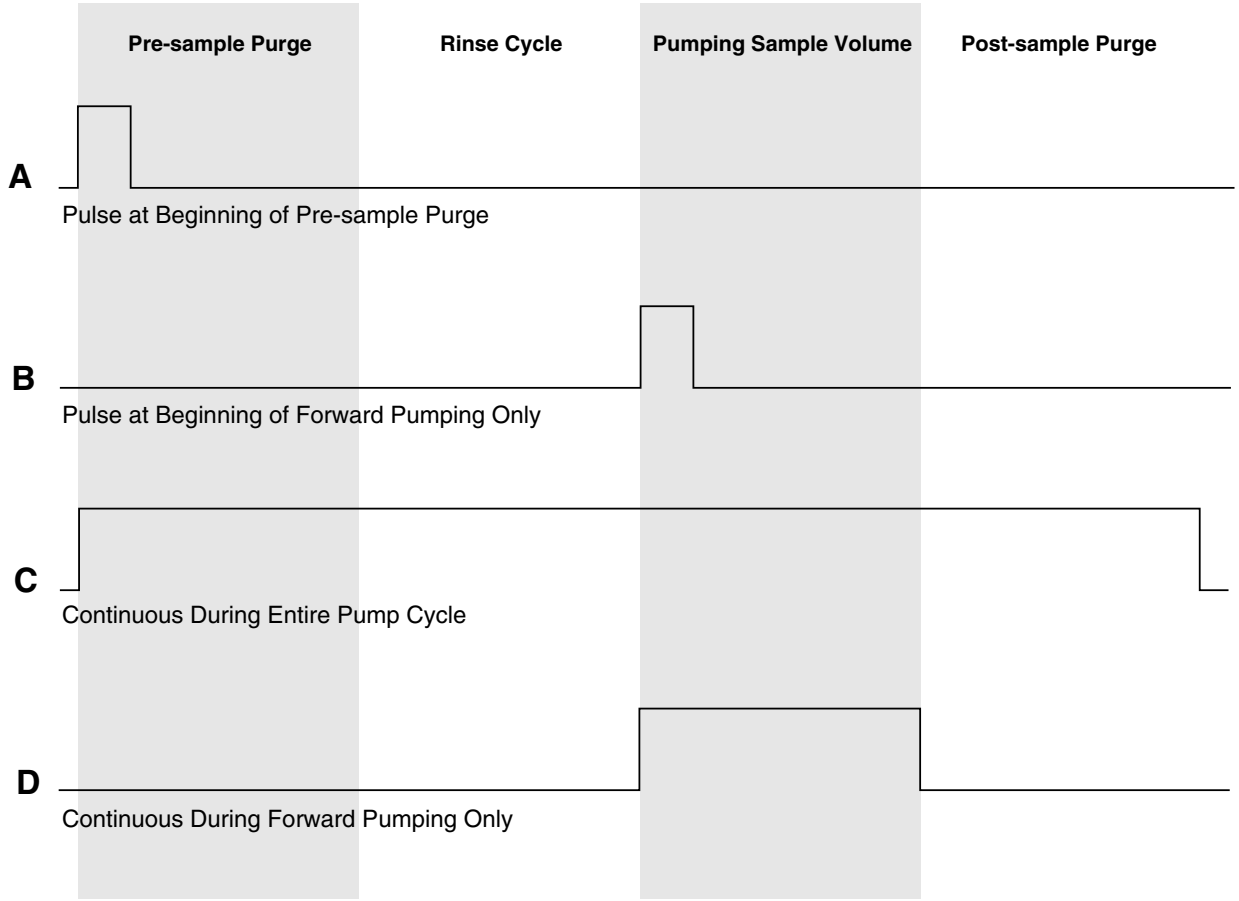

PURGE COUNTS

The Purge Counts option is used to override the number of pump counts needed to clear the suction line in both pre-sample purge and post-sample purge cycles. The pre-sample purge count is normally set to 150 counts and will be reset to this value if the sampler is re-initialized. The post-sample purge count is derived from the suction line diameter and length settings. If your observations indicate that a greater or lesser number of pump counts in either purge is needed, you can change the count settings. Acceptable entries are between 0 and 9999 for both purges. A purge count can be obtained using the PUMP FORWARD or PUMP REVERSE keys. (*Display #'s 340 and 341*).

TUBING LIFE

The Tubing Life option is used to set the number of pump counts needed to trigger the "REPLACE PUMP TUBING" warning. The warning will be activated when the pump count reaches the entered value. You must reset the pump counter after replacing the pump tubing. If you consistently experience a tubing failure at a pump count that differs significantly from the current setting, enter that value here. The factory set value of 500,000 pump counts will deliver approximately 500 samples of 200 ml each, using a 3/8 inch x 10 ft vinyl suction line at a 5 ft suction head. (*Display #350, 351, and 352*).

PROGRAM LOCK

The Program Lock option allows you to protect program and configure settings with a pass-number. Select "ENABLE" to turn the protection on. When the Program Lock is enabled, each protected display can be viewed, but no values can be changed without first entering the pass-number: 3710. Once the pass-number has been entered, you can change any value or setting in either the program or configure sequence. (*Display #360*).

SAMPLER ID

The Sampler ID option allows you to enter a 10 character identification number (ID) for the sampler. The ID number is used to identify sampling reports produced by the Isco Field Printer and in files created by SAMPLINK. The sampler is shipped from the factory with 10 dashes (-) entered for the ID. (*Display #365*).

Acceptable Characters

The ID field will accept digits, dashes, spaces, and periods. You can enter spaces, dashes, and periods with three of the control keys. Enter a space with the START SAMPLING key, a dash (-) with the MANUAL SAMPLE key, and a period with the RESUME SAMPLING key.

RUN DIAGNOSTICS

Run Diagnostics is used to perform a number of diagnostic functions. This option contains the software revision number; tests the sampler's RAM (Random Access Memory), ROM (Read Only Memory), display, and pump; and allows for re-initializing RAM. The display information is discussed below in the order of appearance.

Software Revision Number

The sampler will display the software revision number for a short period of time.

Test RAM and ROM

The software revision display is replaced by the RAM and ROM test messages. A successful test is indicated by the messages "RAM PASSED TEST" or "ROM PASSED TEST." If either the RAM or ROM fail the test, the sampler will display one of the following messages: "RAM FAILED TEST" or "ROM FAILED TEST" and beep every three seconds until you turn the sampler off. If either the RAM or ROM fail their test, the sampler should be serviced. Contact Isco Customer Service for assistance.

LCD Test

After successful RAM and ROM tests, the sampler will then test the LCD by first filling the display with solid rectangles and then printing the alphabet and other characters. Each character position in the display should contain a character.

Pump Test

The next step tests the pump. During the test, the pump will run briefly and the display will indicate an "OFF/ON" number. The number should fall within the range of 50 to 200. If the count falls below 50 or exceeds 200, the pump should be serviced. A count near 100 is typical.

Re-initialize Controller

The final step allows you to re-initialize the sampler. If you select "NO," the sampler will return to the configure option list. If you select "YES," the sampler will reset a number of configuration and program settings, then turn the sampler off. (*Display #371*).

Tables 7 and **8** list the re-initialized settings. Note: Not all settings are reset. Set Clock, Bottle Size, Suction Line, and Sampler ID configure option settings remain unchanged. This reduces the number of settings you would need to change if the sampler were accidentally re-initialized. The Pump Count total is not reset to maintain an accurate count for the Tubing Life Warning.

EXIT CONFIGURATION

This option allows you to leave the configure sequence and return to the standby state. There are no input displays. Press the ENTER/PROGRAM key to exit the configure sequence. The configuration sequence can also be exited at any time using the EXIT PROGRAM key.

Table 7 Factory Program Sequence Settings

Program Setting	Display No.	Factory Setting
TIME/FLOW PACED SAMPLING	10	TIME
UNIFORM/NONUNIFORM TIME INTERVALS	11	UNIFORM
SAMPLE EVERY -- HOURS -- MINUTES	21	1 HOUR 0 MINUTES
SAMPLE EVERY ---- PULSES (1 - 9999)	22	10
TAKE --- SAMPLES (1 - MAX)	25	10
QUANTITY AT INTERVAL 1. -- AT --- MINUTES	27	1 AT 60 MINUTES
SAMPLE VOLUMES OF --- ml EACH (10 - MAX)	50	200
--- COMPOSITE SAMPLES (0 - MAX)	60	10
SUCTION HEAD OF -- FEET (1 - MAX)	70	10
ENTER START TIME? [YES, NO]	90	NO
-- STOP or RESUME TIMES (0 - 24)	100	0

Table 8 Factory Configure Option Settings

Configure Option	Display No.	Factory Setting
SET CLOCK	210	NOT RESET
BOTTLE SIZE	220, 223	NOT RESET
SUCTION LINE	230, 231, 232	NOT RESET
LIQUID DETECTOR		
LIQUID DETECTOR	240	ENABLE
RINSES	241	0
ENTER HEAD MANUALLY	242	NO
# OF RETRIES	243	0
PROGRAMMING MODE	250	BASIC
LOAD STORED PROGRAM	255	
SAVE CURRENT PROGRAM	260	
FLOW MODE SAMPLING		
SAMPLE AT START TIME	270	NO
NONUNIFORM TIME	280	MINUTES
CALIBRATE SAMPLER	290	DISABLE
SAMPLING STOP/RESUME	300	DISABLE
SAMPLE AT STOP TIMES	301	NO
SAMPLE AT RESUME TIMES	302	NO
START TIME DELAY	310	2
ENABLE PIN		
SAMPLE UPON DISABLE	321	NO
SAMPLE UPON ENABLE	322	NO
RESET SAMPLE INTERVAL	323	NO
INHIBIT COUNTDOWN	324	NO
EVENT MARK		
CONTINUOUS /PULSE	330	CONTINUOUS SIGNAL
PUMP CYCLE/FWD ONLY	331	FWD PUMPING ONLY
PURGE/FWD PUMPING	332	FWD PUMPING
PURGE COUNTS		
PRE-SAMPLE COUNTS	340	150
POST-SAMPLE COUNTS	341	BASED ON LINE LENGTH
TUBING LIFE		
RESET PUMP COUNTER	351	NO
# PUMP COUNTS	352	NOT RESET
PROGRAM LOCK	360	DISABLE
SAMPLER ID	365	NOT RESET
RUN DIAGNOSTICS		
RE-INITIALIZE?	371	NO

EXTENDED PROGRAMMING MODE

All sampling capabilities available in the basic programming mode are available in the extended programming mode. (A listing of the capabilities is placed in **Table 6**.) The extended programming mode provides several additional capabilities: Nonuniform Time pacing, Sampling Stops and Resumes, program storage, and Flow Mode Sampling controls.

The procedure used to program the sampler in the extended mode is the same as the procedure used to program the sampler in the basic programming mode. This procedure is outlined in *Programming Examples* on page 23 There are some exceptions, however. The extended mode modifies the sections of the program sequence to allow you to take advantage of the additional features. The Sample Pacing program section is extended to include settings for nonuniform times. If you have enabled the Sampling Stops and Resumes configure option, the Key Times section is extended to included displays for sampling stops and resumes.

Each of these extended features is discussed briefly below. You may find it helpful to refer to **Figure 12** which charts the program sequence in the extended mode.

EXTENDED MODE SAMPLE PACING

In the extended programming mode, the Sample Pacing section allows you to select flow pacing, or one of two types of time-pacing: uniform or nonuniform. If you select uniform time intervals, the settings for time intervals are identical to the time intervals entered in the basic programming mode.

Nonuniform times allow you to pace the sampler at irregular intervals. Before you enter nonuniform time intervals, you must specify either minutes or clock times in the Nonuniform Times configure option. You can enter nonuniform intervals in two ways. The first method allows you to define the interval between each sample event in minutes. For example, you can program the sampler to take sample #2 after an interval of 10 minutes, sample #3 after an interval of 30 minutes, sample #4 after an interval of 60 minutes, and so on. Sample #1 would be taken at the start time. The second method allows you to enter a specific time and date for each sample event. For example, with nonuniform time pacing, samples can be collected at specific times and dates at irregular intervals: 6:00 am on April 15, noon on April 15, 7:00 am on April 16, and 1:00 pm (or 13:00 in military time) on April 16. If you have several sequences of nonuniform times, you can use the program storage feature to save the programs using each sequence.

When you enter nonuniform times, you will be prompted to enter the number of nonuniform samples — "TAKE - - SAMPLES" (*Display 25*) — before you enter the nonuniform times. This display replaces the Number of Composite Samples display (*Display #60*) in the program sequence.

EXTENDED MODE SAMPLE VOLUMES

The extended mode Sample Volumes section is identical to the basic Sample Volume section. It is modified only when you are using nonuniform times. The Number of Composite Samples display is removed (*Display #60*) as discussed above.

EXTENDED MODE KEY TIMES

The extended mode Key Times section has one additional set of displays which allow you to set up the sampling stop and resume times. The Stops and Resumes settings are available only when you have enabled the Sampling Stop/Resume configure option (see *Sampling Stop/Resume* on page 38). You must first enter the number of stops and resumes, from 0 to 24. (Enter "0" if you want to omit the stop and resume settings without returning to the configure sequence and disabling the Stops and Resumes option.) Then enter the stop and resume clock times. The first entry will be a stop time. Refer to the Key Times section of **Figure 12**, display #'s 100, 101, and 102.

Determining the Number of Samples with Stops and Resumes

When using stops and resumes, determining the number of samples you want deposited in the container requires a little planning. With a time-paced routine, a sample will always be taken automatically at the *start* time. No sample will be taken at the *stop* time unless you have selected "ENABLE" in the Sample at Stop Time display of the Sampling Stops and Resumes configure option, even if the stop time falls at a scheduled sample event time. No sample will be taken at the *resume* time unless you have selected "ENABLE" in the Sample at Resume display of the Sampling Stops and Resumes option.

Figure 12 Extended Programming Mode: Program Sequence Structure

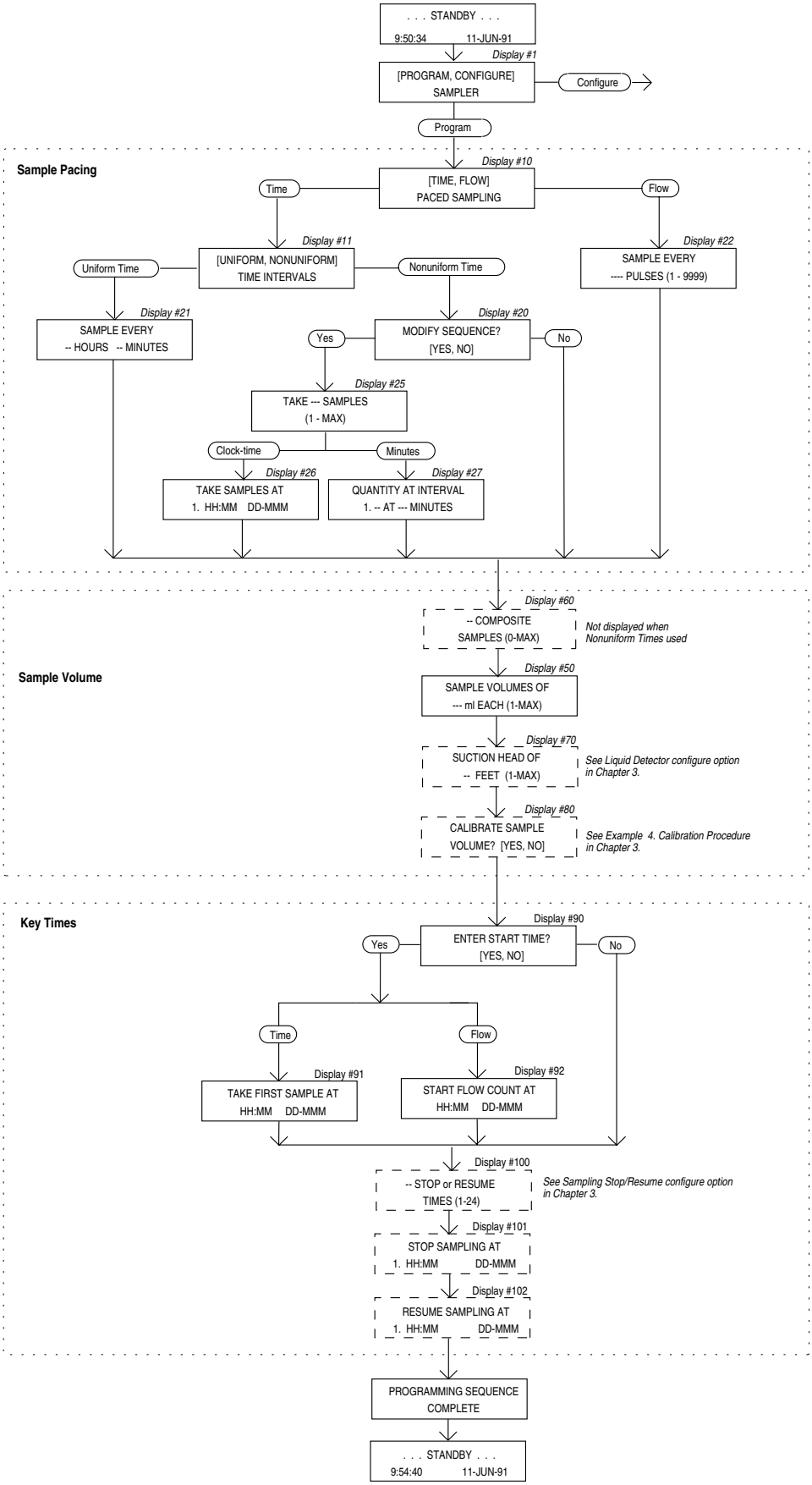

When you are using Stops and Resumes with flow-paced routines, a sample will not be taken at the start time, unless you have configured the sampler to do so in the Flow Mode Sampling configure option. With flow-paced routines, no sample will be taken at the stop time unless you have selected "ENABLE" in the Sample at Stop Time display of the Sampling Stops and Resumes option. No sample will be taken at the resume time unless you have selected "ENABLE" in the Sample at Resume display of the Sampling Stops and Resumes option.

If the number of samples deposited is not important to you or if you are using a flow-paced routine for a flow-stream with an unpredictable flow rate, enter "0" in the Number of Composite Samples display (*Display #60*). The sampler will take samples indefinitely, governed by the scheduled stop and resume time. It will be "DONE" at the final stop time or when the weight table terminates the routine.

START TIMES

This section discusses the sampler's start times. It begins by outlining the sequence of events preceding the start time for most sampling routines.

After you program a sampler, you must start the sampling routine by pressing the START SAMPLING key. However, depending on the program and configure option settings, the sampling routine may not start at soon as you press the key. The "Delay to Start Time" is the period between the time you press START SAMPLING and the start time for the routine. **Figure 13** diagrams the sequence of events preceding the start time.

The start time for a routine is either the programmed start time or the time at which the delay to start time expires. The programmed start time is determined by entries made in Displays #90, #91, and #92. The delay to start time is determined by the entry in Display #310 of the Start Time Delay configure option. These input displays are illustrated below. They are also illustrated in the program structure charts in **Figure 10** on page 24 and **Figure 12**.

Note: Unless the sampling routine contains a programmed start time (Displays #91 or #92), the sampler will delay the start time according to the amount of time specified in the Start Time Delay configure option. A programmed start time entry always overrides any settings made in the Start Time Delay configure option.

Programmed Start Time displays (Program Sequence)

ENTER START TIME? [*YES*, NO]	*Display #90*
TAKE FIRST SAMPLE AT *HH*:MM DD-MMM	*Display #91 (time-paced sampling)*
START FLOW COUNT AT *HH*:MM DD-MMM	*Display #92 (flow-paced sampling)*

Start Time Delay display (Configure Sequence)

---- MINUTE DELAY TO START (0 - 9999)	*Display #310 (Start Time Delay configure option)*

Figure 13 Simplified Start Time Diagram

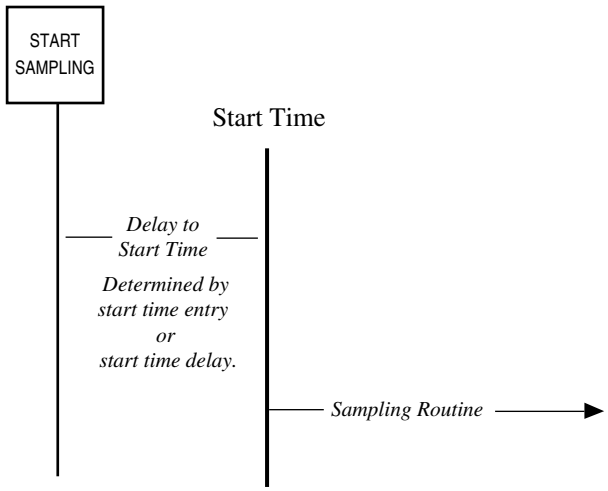

Isco 3200 and 4200 Series Flow Meters, and 4100 Series Flow Loggers provide two essential functions for certain sampling applications. They send flow-pacing signals — flow pulses — to the sampler for flow-paced sampling. The second function provides disable (inhibit) or enable signals to the sampler. A sampler receiving a disable signal will suspend the sampling routine until it receives an enable signal.

The sampler will *disregard* a disable signal received from a flow meter during the delay to start time. If the sampler is disabled when the start time occurs, it will suspend the routine until it is enabled. Once enabled, the sampler will begin the time or flow intervals. The sampler will initiate a sample event when enabled for all time-paced routines.

For flow-paced routines, it will initiate a sample event when the sampler is configured to take a sample upon enable in the Enable Pin configure option (page 39).

If the sampler is enabled when the start time occurs, it will begin the routine. The sampler will initiate a sample event at the start time for all time-paced routines. It will initiate a sample event at the start time for flow-paced routines when configured for sample at start time in the Flow Mode configure option (*Nonuniform Time* on page 38). Refer to **Figure 14**. The diagram shows the sampler's response when enabled or disabled at the start time for most basic and extended mode routines.

Nonuniform Clock Times and Disable Signals

Figure 15 diagrams the sequence of events preceding a routine programmed for nonuniform clock times. Nonuniform clock time programming allows you to enter a specific time and date for each sample event. Samplers programmed with nonuniform clock times may skip a number of samples if disabled for long periods. If the sampler is disabled and subsequently enabled, it will initiate only one event to compensate for the skipped sample events even if several sample event times have been passed.

Note: Nonuniform clock time programming is designed to replace flow-pacing when a flow meter is not available at the site. Before using a sampler programmed for nonuniform clock times with a flow meter, be sure flow-pacing is not a more appropriate application.

The sampler will disregard the MANUAL SAMPLE key during the delay to start time and during the disable period. The periods where the sampler disregards disable signals (Delay to Start) and the MANUAL SAMPLE key (when disabled) appear in **Figures 14** and **15**.

Entries made in the Start Time Delay configure option affect the start times. (See page 38.)

Figure 14 Start Time Diagram

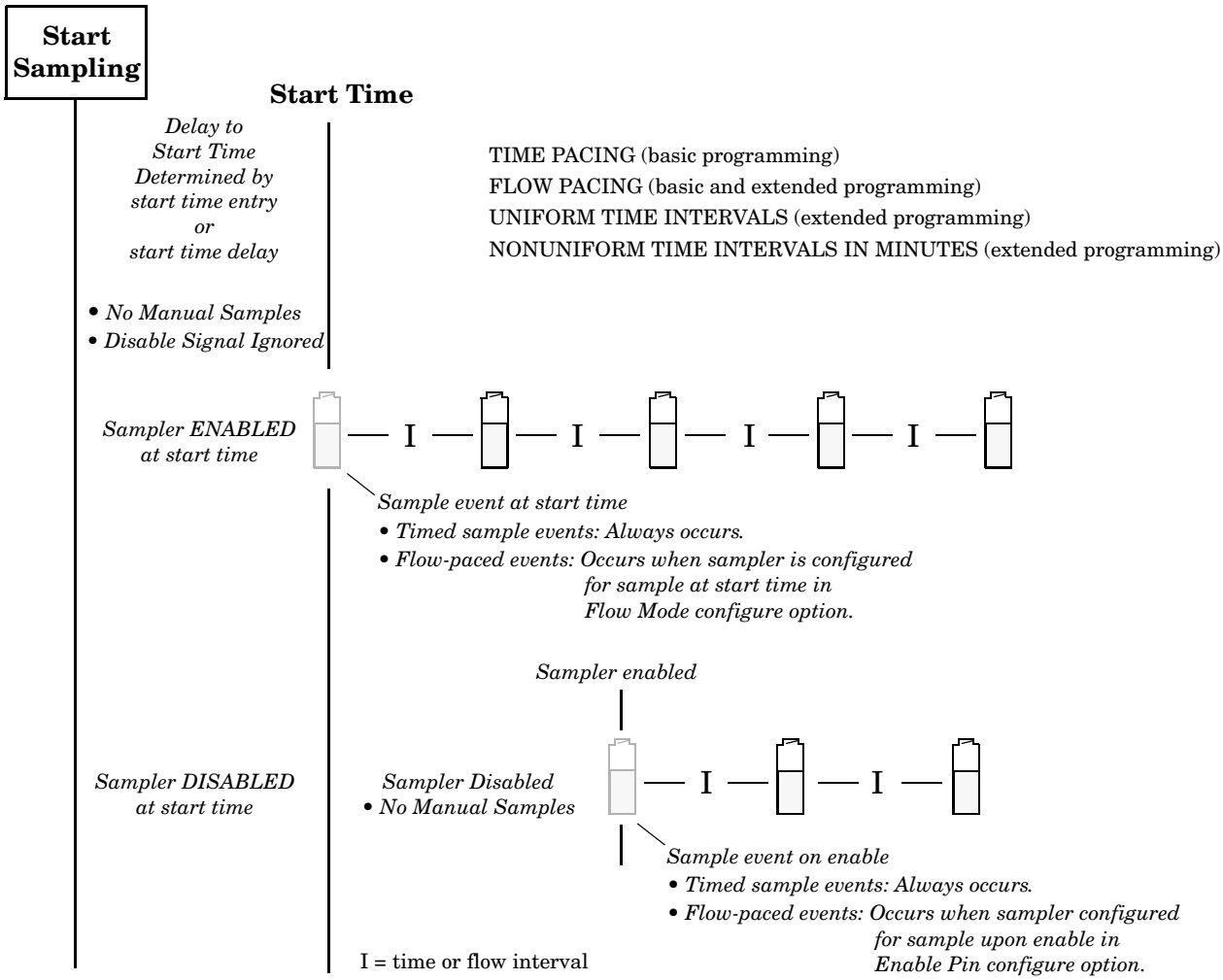

Figure 15 Start Time Diagram for Nonuniform Clock Time Routines

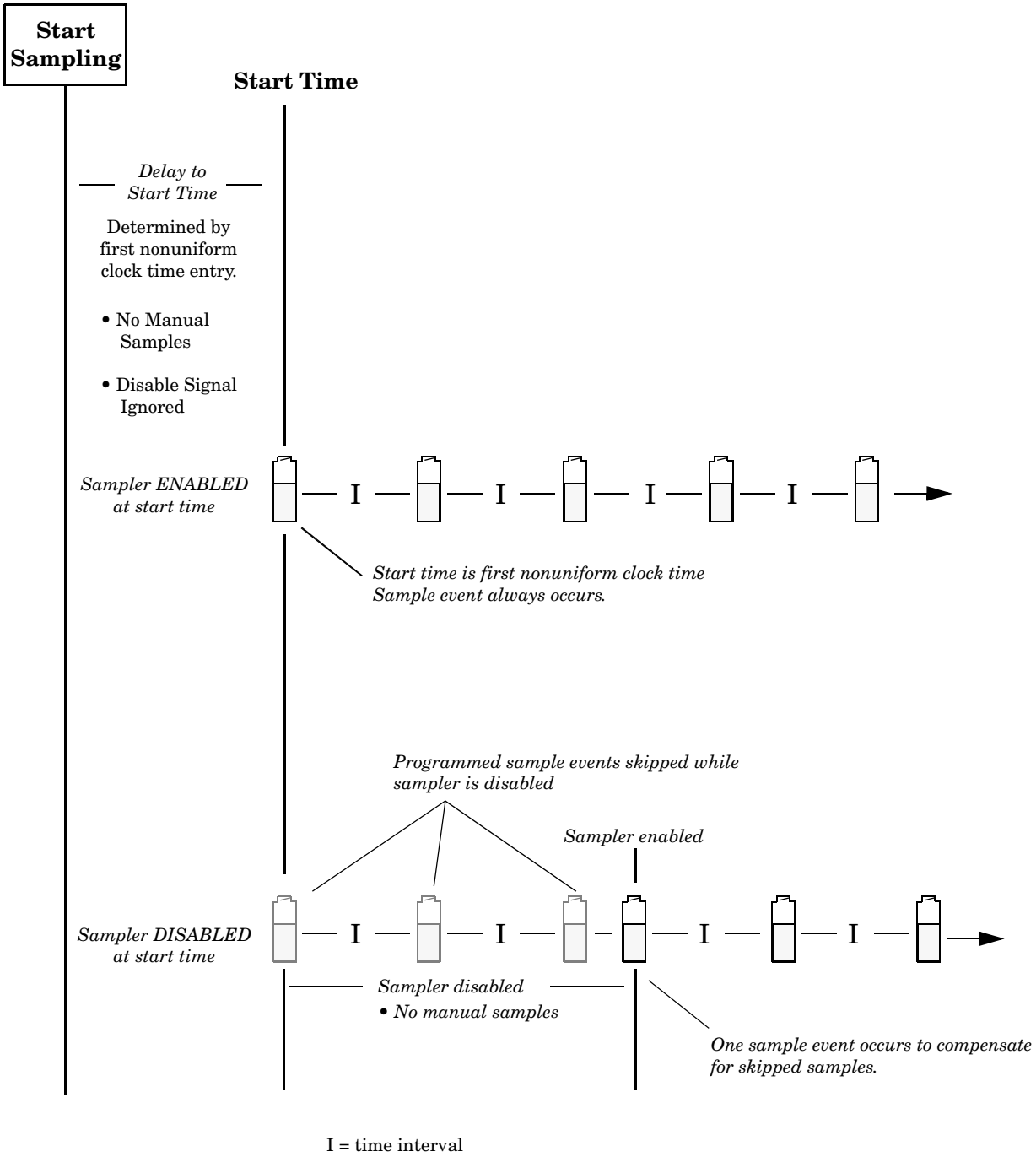

Foreign Languages and Metric Units of Measure

The sampler provides displays in French, Spanish, and German. Additionally, it supports entries in metric units of measure. Metric units include volumes in milliliters, suction head and suction line length in decimeters, and suction line ID in millimeters.

Samplers using French, Spanish, and German language displays support metric units for suction line and suction head measurements. Samplers operating with English displays support either English or metric units for suction line and suction head measurements. (Sample volumes are always entered in milliliters, regardless of the selected language.)

To program the sampler for foreign language displays, begin by placing the sampler in standby. Then, access the language programming sequence by pressing the STOP key five times. The standby display will be replaced by the input display illustrated below.

[*English*, German, Spanish, French]

Select the preferred language from this display. If you select French, Spanish, or German, the sampler will automatically convert English units of measure to metric units and return to standby. If you select English, the input display shown below will appear.

Select the units of measure from this display. After you've made the selection, the sampler will convert the units of measure as required and return to standby.

[*U.S.*, Metric]
Units

Programming Examples

The following examples demonstrate the steps used to program the sampler for several different sampling routines in the extended programming mode. Each programming example concludes with the run state displays that appear for that routine. The examples assume you are familiar with the functions of the keys as discussed in *Keypad Description* on page 19 and *Displays* on page 20.

Example 7 Extended Time-paced Sampling

The following example programs the sampler to take 12 time-paced 500 ml samples. Samples are to be taken at uniform time intervals of 30 minutes starting at 8:00 am on the following day.

Step No.	Display	Procedure
1	. . . STANDBY . . . 10:34:50 14-JUN-91	Press ENTER/PROGRAM to access the interactive state.
2	[*PROGRAM*, CONFIGURE] SAMPLER	Access the program sequence by selecting "PROGRAM."
3	[*TIME*, FLOW] PACED SAMPLING	Select "TIME."
4	[*UNIFORM*, NONUNIFORM] TIME INTERVALS	Select "UNIFORM."
5	SAMPLE EVERY 0 HOURS, *10* MINUTES	Enter "0" to set the hours at zero. Press ENTER/PROGRAM to store the number "0" and move to the minutes entry.
6	SAMPLE EVERY 0 HOURS, *30* MINUTES	Enter "30" to set the minutes entry to 30.

Step No.	Display	Procedure
7	*12* COMPOSITE SAMPLES (0-470)	Enter the number of samples to be collected: “12.”
8	SAMPLE VOLUMES OF *500* ml EACH (10 - 780)	Enter “500” to set the sample volume at 500 ml.
9	ENTER START TIME? [*YES*, NO]	Select “YES.”
10	TAKE FIRST SAMPLE AT *8*:00 15-JUN	Enter the start time and date: 8:00 on June 15.
11	PROGRAMMING SEQUENCE COMPLETE . . .	After this message is displayed briefly, the sampler will automatically return to the standby state.
12	. . . STANDBY . . . 10:37:23 14-JUN-91	When the sampler is properly installed, press the START SAMPLING key to run the program.
	Run State Displays	**Comment**
13	SAMPLE 1 OF 12 AT 8:00 10:38:07	This display appears as the sampler counts down the time remaining to the start time. The first line reports the number of the upcoming sample event and the total number of sample events for the routine. The second line reports the start time at the left and the current time on the right.
14	SAMPLE 1 OF 12	When the start time occurs, the sampler will take the first sample. The sample event cycle begins with a pre-sample purge. During the purge, the display indicates the sample event number and the number of sample events for the routine.
	SAMPLE 1 OF 12 PUMPING 500 ml	As soon as the pump runs forward to deliver the sample volume, the message on the second line appears and remains through the post-sample purge.
15	SAMPLE 2 OF 12 AT 8:30 8:01:11	This display appears when the post-sample purge from the previous sample event is completed. It indicates the number of the upcoming sample event. The second line displays the scheduled time for the next event on the left. The current time is displayed on the right.
16	↓ ↓	The cycle of displays is repeated until the sampling routine is done.
17	DONE . . . 12 SAMPLES 2:10:35 15-JUN-91	When the routine is completed, this message appears. It reports the status of the routine (“DONE”), the total number of sample events, and the current time and date.

Example 8 Nonuniform Time-paced Sampling

The following example programs the sampler to take time-paced samples at nonuniform time intervals. This example assumes the sampler is connected to a Liquid Level Actuator which will inhibit the sampler until the liquid level rises to contact the Actuator probe.

The sampler is to take 20, 100 ml samples: the first samples are to occur at 10 minute intervals for one hour, the following samples at 20 minute intervals for one hour, and the remaining samples at 30 minute intervals. Although this example assumes that nonuniform times are being used with the Actuator, uniform time intervals or flow intervals can be used with the Actuator as well.

Step No.	Display	Procedure
1	. . . STANDBY . . . 10:34:50 14-JUN-91	Press ENTER/PROGRAM to access the interactive state.
2	[*PROGRAM*, CONFIGURE] SAMPLER	Access the program sequence by selecting "PROGRAM."
3	[*TIME*, FLOW] PACED SAMPLING	Select "TIME."
4	[UNIFORM, *NONUNIFORM*] TIME INTERVALS	Select "NONUNIFORM."
5	MODIFY SEQUENCE? [*YES*, NO]	Select "YES" to modify the sequence of nonuniform time entries.
6	TAKE *20* SAMPLES (1-470)	Enter the total number of samples: "20." This entry should always include the sample taken at the start time.
7	QUANTITY AT INTERVAL 1. *5* AT 10 MINUTES	Enter the number of samples to occur at the first interval. The sampler is to take samples at 10 minute intervals for one hour or 6 samples in the first hour. Since the first sample is taken at the start time, the remaining five samples will occur at the 10 minute intervals.
8	1. 5 AT 10 MINUTES 2. *3* AT 20 MINUTES	When you have completed the first entries, the display will "roll" to move the first interval entries to the first line, and add the second line entries for the next series of samples and intervals. Enter the next entries: "3" samples at "20" minutes.
9	2. 3 AT 20 MINUTES 3. *11* AT 30 MINUTES	Enter the third set of samples and intervals, "11" samples at "30" minutes.
10	SAMPLE VOLUMES OF *100* ml EACH (10 - 470)	Enter "100" to set the sample volume at 100 ml.
11	ENTER START TIME? [YES, *NO*]	Select "NO."
12	PROGRAMMING SEQUENCE COMPLETE	After this message is displayed briefly, the sampler will automatically return to the standby state.
13	. . . STANDBY . . . 10:37:23 14-JUN-91	Press the START SAMPLING key to run the program.

Step No.	Display	Procedure
	Run State Displays	**Comment**
14	SAMPLER INHIBITED! 10:35 15-JUN-91	This display appears while the actuator is inhibiting the sampler. The second line indicates the current time and date.
15	SAMPLE 1 OF 20 AT 11:26 11:25:47	This display appears when the sampler becomes enabled and counts down the time remaining to the start time. The first line reports the number of the upcoming sample event and the total number of sample events for the routine. The second line reports the start time at the left and the current time on the right.
16	SAMPLE 1 OF 20	When the start time occurs, the sampler will take the first sample. The sample event cycle begins with a pre-sample purge.
	SAMPLE 1 OF 20 PUMPING 100 ml	As soon as the pump runs forward to deliver the sample volume, the message on the second line appears. This message remains through the post-sample purge.
17	SAMPLE 2 OF 20 AT 11:36: 11:26:11	This display appears when the post-sample purge from the previous sample event is completed. It indicates the number of the upcoming sample event. The second line displays the scheduled time for the next event on the left; the current time is displayed on the right.
18	↓ ↓	The cycle of displays is repeated until the sampling routine is done.
19	DONE . . . 20 SAMPLES 8:10:35 16-JUN-91	When the routine is completed, this message appears. It reports the status of the routine (“DONE”), the total number of sample events; and the current time and date.

Example 9 Entering Nonuniform Times as Specific Clock Times

Nonuniform times can be entered in either the method shown in **Example 8** or by specifying a clock time and date for each sample. The abbreviated example below shows the displays used to enter the clock times. (The type of display, clock time or minutes, used in the program sequence is controlled by the settings in the Nonuniform Times configure option; you must specify either clock time or minutes.)

Step No.	Display	Procedure
1	TAKE SAMPLES AT 1. *06*:00 14-JUN	Enter the time and date for the first sample event. Times and dates are entered on the second line of the display.
2	1. 06:00 14-JUN 2. *07*:00 14-JUN	Enter the time and date for the second sample event. The controller will guess a time at the hour succeeding the previously entered time.
3	2. 06:30 14-JUN 3. *07*:00 14-JUN	Enter the time and date for the third sample event.
4	↓ ↓	Continue to enter times and dates for each sample event. After all sample event times have been entered, the sample distribution section of the programming sequence will appear.

Example 10 Extended Time-paced Sampling Using Stops and Resumes

The following example programs the sampler to take time-paced 200 ml samples at uniform time intervals of 15 minutes starting at 6:00 am on the following day. The sampling is to continue from 6:00 am until 8:00 am. The sampling will resume again at 11:00 am and continue until 1:30 pm. It will pause until 4:00 pm and continue until 6:00 pm.

When the sampling is stopped at 6:00 pm, 24 to 29 samples will have been taken. However, in this particular application, the number of samples is not important, so the sampler will be instructed to take samples indefinitely. This is done by entering "0" in the Number of Samples display as demonstrated in step 7 below. Note: The Sampling Stop and Resumes configure option has settings which allow you to take a sample at the stop and resume times. See *Sampling Stop / Resume* on page 38.

Step No.	Display	Procedure
1	. . . STANDBY . . . 10:34:50 14-JUN-91	Press ENTER/PROGRAM to access the interactive state.
2	[*PROGRAM*, CONFIGURE] SAMPLER	Access the program sequence by selecting "PROGRAM."
3	[*TIME*, FLOW] PACED SAMPLING	Select "TIME."
4	[*UNIFORM*, NONUNIFORM] TIME INTERVALS	Select "UNIFORM."
5	SAMPLE EVERY 0 HOURS, *10* MINUTES	Enter "0" to set the hours at zero. Press ENTER/PROGRAM to store the number "0" and move to the minutes entry.
6	SAMPLE EVERY 0 HOURS, *15* MINUTES	Enter "15" to set the minutes entry to 15.
7	*0* COMPOSITE SAMPLES (0-470)	Enter "0" so that the sampler will take samples until the last stop time or until the weight table terminates the sampling routine.
8	SAMPLE VOLUMES OF *200* ml EACH (10 - 9400)	Enter "200" to set the sample volume at 200 ml.
9	ENTER START TIME? [*YES*, NO]	Select "YES."
10	TAKE FIRST SAMPLE AT *06*:00 15-JUN	Enter the start time and date of the sampling program: 6:00 AM tomorrow.
11	*5* STOP or RESUME TIMES (0-24)	Enter "5." There are three stop times and two resume times.
12	STOP SAMPLING AT 1. *08*:00 15-JUN	Enter the time and date of the first stop time: 8:00 am.
13	RESUME SAMPLING AT 1. *11*:00 15-JUN	Enter the time and date the program should resume: 11:00 am.

Step No.	Display	Procedure
14	STOP SAMPLING AT 2. *13*:30 15-JUN	Enter the time and date of the second stop time: 1:30 pm or 13:30. You must enter the times in military time.
15	RESUME SAMPLING AT 2. *16*:00 15-JUN	Enter the time and date the program should resume: 4:00 pm or 16:00 in military time.
16	STOP SAMPLING AT 3. *18*:00 15-JUN	Enter the final stop time: 6:00 pm or 18:00 in military time.
17	PROGRAMMING SEQUENCE COMPLETE . . .	After this message is displayed briefly, the sampler will automatically return to the standby state.
18	. . . STANDBY . . . 10:37:23 15-JUN-91	Press the START SAMPLING key to run the program.
	Run State Displays	**Comment**
19	SAMPLE 1 OF ? ? ? AT 6:00 10:38:07	This display appears as the sampler counts down the time remaining to the start time. The first line reports the number of the upcoming sample event. The question marks, in the upper right, appear for routines which will take an indeterminate number of samples. The routine will terminate when the weight table is triggered. The second line reports the start time at the left and the current time on the right.
20	SAMPLE 1 OF ? ? ?	When the start time arrives, the sampler will take the first sample. The sample event cycle begins with a pre-sample purge.
	SAMPLE 1 OF ? ? ? PUMPING 500 ml	As soon as the pump runs forward to deliver the sample volume, the message on the second line appears. This message remains through the post-sample purge.
21	SAMPLE 2 OF ? ? ? AT 6:15 6:01:11	This display appears when the post-sample purge from the previous sample event is completed. It indicates the number of the upcoming sample event. The second line displays the scheduled time for the event on the left. The current time is displayed on the right.
22	↓ ↓	The cycle of displays is repeated until the sampling routine is done.
23	DONE . . . 26 SAMPLES 18:10:35 16-JUN-91	When the routine is completed, this message appears. It reports the status of the routine (“DONE”), the total number of sample events, and the current time and date.

STANDBY STATE

A sampler in the standby state is waiting for your instructions. From standby, you can start or resume a sampling program, access the program or configure sequences, take manual samples, and use the DISPLAY STATUS key to review program settings or the results of a sampling routine.

A sampler in standby uses a number of displays to communicate its status. Some of these displays are associated with the function of a specific key; other displays are used to notify you that a sampling program is done, halted, or has encountered a problem. The standby state displays and valid keys are discussed below.

Standby Display

When you first turn the sampler on, the sampler "wakes up" in the standby state. The standby display, illustration *a*, simply informs you that the sampler is in standby and reports the current time and date.

```
. . . STANDBY . . .
10:37:23   16-JUN-91
```

a

At this point, the following keys are operable: ON/OFF, PUMP REVERSE, PUMP FORWARD, START SAMPLING, MANUAL SAMPLE, DISPLAY STATUS, and ENTER/PROGRAM.

Program Halted

A sampling program can be halted with either the STOP or EXIT PROGRAM key; if this occurs, the sampler will display the halt message shown in illustration *b*. If you halt the program to take a manual sample or to change a setting in the program or configure sequence, the sampler will return to standby. If this is the case, you will not be able to use the RESUME SAMPLING key.

```
. . . PROGRAM HALTED . . .
10:37:33   16-JUN-91
```

b

Each operable key is listed and discussed below.

ON/OFF - When in the standby state, this key simply shuts the sampler off.

PUMP FORWARD and PUMP REVERSE - The PUMP FORWARD and PUMP REVERSE keys run the pump forward or in reverse until you interrupt it with the STOP key. While the pump is running, the message illustrated in *c* or *d* is displayed, depending on the pumping direction.

```
PUMPING FORWARD . . .
```

c

```
PUMPING REVERSE . . .
```

d

When you press the STOP key, the sampler will display a message similar to the one illustrated in *e*. This message indicates the total number of pump counts that occurred while the pump was running. This information can be used to set the desired number of purge counts required to purge the suction line. See the Purge Counts configure option on page 40. Press any key, except STOP and ON/OFF, to return to the standby display.

```
311 COUNTS FORWARD
```

e

MANUAL SAMPLE - You can take manual samples in standby by pressing the MANUAL SAMPLE key. After you press the MANUAL SAMPLE key, the sampler will deliver the programmed sample volume. A manual sample delivers the sample volume currently entered as a programmed setting, and includes the pre-sample and post-sample purges. It will also include any programmed rinses and retries. The sampling process can be stopped with the STOP key at any time. If you press the MANUAL SAMPLE key while a sampling program is in progress, the manual sample will be counted as one of the programmed samples.

While the sample is being delivered, the sampler displays a message similar to that illustrated in *f*. The second line will not appear until the pump begins to pump forward to deliver the sample. The display will revert to standby after the manual sample has been delivered.

```
. . . MANUAL SAMPLE . . .
PUMPING  200 ml
```

f

START SAMPLING - Once you have programmed and configured the sampler, use the START SAMPLING key to run the sampling program. There are two instances where the sampler will not be able to run the program immediately. These occur when the program has been started after the programmed start time or after one or more programmed stop times.

When you press the START SAMPLING key after a program has been halted, the sampler will give you the choice between resuming the program and starting the program by presenting the display illustrated in *g*.

```
[START, RESUME]
SAMPLING PROGRAM?
```

g

Select "START" to start the program from the beginning. Select "RESUME" to resume the program at the point at which it halted. If you do not make a selection from this display within 60 seconds, the sampler will automatically select the currently blinking response. START will re-initialize the display status memory.

RESUME SAMPLING - To resume or restart the program, press the RESUME SAMPLING or START SAMPLING key. When you press the RESUME SAMPLING key, the program will resume at the point it was halted. The display must read "PROGRAM HALTED" for the RESUME SAMPLING key to be active. If any samples were missed during the time the program was halted, the sampler will inform you with the message illustrated in *h*. The sampler will initiate one sample event if one or more sample events were missed.

2 SAMPLES WILL BE SKIPPED

h

Additional Displays

There are three additional displays used in the run state. The sampler will inform you it has completed a program by displaying the message illustrated in *i*. This message is displayed until you press any key, at which time the display will return to the standby message.

DONE . . . 24 SAMPLES	
10:37:33 16-JUN-91	

i

Problem Occurred

You will be informed that a problem was encountered during the sampling routine with the message illustrated in *j*. This display will alternate with the "DONE" display at approximately three second intervals until you press any key.

PROBLEM OCCURRED . . .
PRESS DISPLAY STATUS

j

Float/Weight Tripped

3710R/3710VR/3750 Refrigerated Samplers use the display *k*, to notify you that the program finished because the weight table was tripped. This display alternates with the "DONE" display at approximately three second intervals.

FLOAT/WEIGHT TRIPPED

k

Example 11 Program Started Later than Programmed Start Time

Display	Display No.	Procedure
PAST START TIME . . .		This display informs you of the expired start time. The sampler will present this display for a short time, then advance to the next display.
1 SAMPLES WILL BE SKIPPED		This display reports the number of samples which will be skipped if you do not change the start time; it appears only if more than one sample event time has passed.
CHANGE START TIME? [*YES*, NO]	142	Select "YES" if you want to change the start time. Select "NO" if missed samples are acceptable.
TAKE FIRST SAMPLE AT *12*:30 16-JUN	93	This display appears when you select "YES" in display #142 and a sample event is to occur at the start time. Enter the new start time.
START FLOW COUNT AT *12*:30 16-JUN	94	This display appears when you select "YES" in display #142 and no sample is to occur at the start time for a flow-paced sampling routine. Enter the new start time.

Example 12 Program Started Later than Programmed Stop Time

Display	Procedure
PAST STOP TIME . . . PLEASE REPROGRAM	This display informs you of the expired stop time. The sampler presents this display for a short time, then reverts to standby.
. . . STANDBY . . . 10:22:34 17-JUN	You must access the program sequence to change the expired stop and resume times. Once you've made the changes, start the routine again with the START SAMPLING key.

DISPLAY STATUS

You can access a summary of the current program settings and the results of the most recent sampling routine with the DISPLAY STATUS key. This key is valid in both the run and standby states. The summary of the program settings consists of a number of informational displays describing the settings. The results of the sampling program include information about each sample event and reports problems encountered during the program. This information remains in memory until you start another program.

You can retrieve this information with Isco's Field Printer or a laptop computer running Isco's SAMPLINK software. Both methods produce two reports which contain the sampler ID, current status, program settings, and sampling results.

If a sampling routine is in progress when you press the DISPLAY STATUS key, the sampling routine will be suspended. No samples will be taken until you exit Display Status.

If the pump count reaches the number entered for the Tubing Life Warning setting, the Pump Tubing Warning will be displayed.

An illustration of the warning is shown below.

WARNING: REPLACE
PUMP TUBING!

DISPLAY STATUS AND REVIEWING OR PRINTING PROGRAM INFORMATION

The sampler tracks and reports the following items:

- program start time and date.
- sample volume.
- source of each sample event.
- cause of any missed samples.
- start time of each sample event.
- number of pump counts to liquid detection for each event.
- time the routine was completed.
- sampler ID.
- current time and date.
- program settings.

Each of these items is illustrated in **Example 13**.

When you press DISPLAY STATUS, the display shown below follows the pump tubing warning. It allows you to review the program settings or sampling results.

[*REVIEW*, PRINT]
PROGRAM INFORMATION

Display #148

Select "REVIEW" to review the program settings and sampling results. The sampler will present the display shown below. Use this display to leave the display status procedure or to review the program settings or sampling results.

REVIEW PROGRAM [NO,
SETTINGS, RESULTS]

Display #150

Select "NO" to return to the previous operating state. If you entered display status from standby, the standby message will reappear. If you entered display status from the run state, the sampling routine will resume.

Select "SETTINGS" to review the program settings. Use the LEFT ARROW, RIGHT ARROW, and the ENTER/PROGRAM keys to move through the sampling settings. When the RIGHT ARROW or the ENTER/PROGRAM key is pressed at the last settings display, the "REVIEW PROGRAM" display will reappear.

Select "RESULTS" to review the results of the sampling routine. The first display reports the time and date the sampling program started. Use the LEFT ARROW, RIGHT ARROW, and ENTER/PROGRAM keys to move through the results. If the routine was finished at the time you pressed the DISPLAY STATUS key, the last display will report the time and date the routine ended.

Select "PRINT" from Display #148 to send the current status, program settings, or sampling results to the Isco Field Printer. For information on the reports produced by the Field Printer, refer to the *Field Printer Instruction Manual*.

When you select "PRINT," Display #149 appears. Use this display to select the settings or results report. (The sampler will interrupt the reports to take a sample, if necessary.) Select "NO" to return to standby.

PRINT PROGRAM [NO, SETTINGS, *RESULTS*]	Display #149

The sampler will display one of two messages as it sends the data to the printer. The first message informs you that the transmission is in progress. The second message is a warning which informs you that the sampler is unable to detect the printer. If you see the warning message, check the cable connections between the printer and the sampler.

. . . PRINTING . . . PROGRAM INFORMATION

PRINT ABORTED NO PRINTER DETECTED!

Source of Sample Event

The display illustrated in step 6 of **Example 13** shows the sample event number and the source of the sample event. Source refers to the programmed or configured setting that initiated the sample event. For example, the sampler will report "TIME" as a source if the sample was taken as one of the program's time-paced samples. Eight sources are tracked and reported for a composite sampler:

Time - The sample event was one of the program's time-paced samples.

Flow - The sample event was one of the program's flow-paced samples.

Start - The sample event was initiated at the program's start time.

Resume - The sample event was initiated to compensate for a missed sample which should have occurred while the sampler was halted. If more than one sample event was missed, only one sample will be taken.

Power - The sample event was initiated to compensate for a missed sample which should have occurred while the sampler was without power. If more than one sample was missed, only one sample will be taken.

Enable - The sample event was initiated when the sampler became enabled by a device connected to pin F of the flow meter connector, generally a 3200 or 4200 Series Flow Meter, 4100 Series Flow Logger, or Liquid Level Actuator. This source is also reported when the sample was initiated at a programmed resume time. Two different configure option settings control this event: the Sample Upon Enable setting in the Enable Pin configure option and the Sample at Resume setting in the Sampling Stop/Resume configure option.

Manual - The sample event was initiated with the MANUAL SAMPLE key and was counted as one of the programmed sample events.

Disable - The sample event was initiated when the sampler became disabled by a device connected to pin F of the flow meter connector, generally a 3200 or 4200 Series Flow Meter, 4100 Series Flow Logger, or a Liquid Level Actuator. This source is also reported when the sample was taken at a programmed stop time. Two different configure option settings control this event: the Sample Upon Disable setting in the Enable Pin configure option and the Sample at Stop setting in the Sampling Stop/Resume configure option.

Example 13 Display Status: Results of Sampling Program

Step No.	Display	Procedure
1	DONE . . . 24 SAMPLES 12:34:50 20-JUN-91	Press DISPLAY STATUS to view the results of the sampling program.
2	[*REVIEW*, PRINT] PROGRAM INFORMATION	Select "REVIEW."
3	REVIEW PROGRAM [NO, SETTINGS, *RESULTS*]	Select "RESULTS."

Example 13 Display Status: Results of Sampling Program (continued)

4	PROGRAM STARTED AT 5:30 19-JUN-91	This display reports the start time and date of the program. Press ENTER/PROGRAM to advance to the next display.
5	200 ml SAMPLES	This display reports the nominal sample volume. Press ENTER/PROGRAM to advance to the next display.
6	SAMPLE 1 of 24 SOURCE: START	This display reports the number of each sample event. It also reports the source of the event; in this case, the sample was taken at the start time. Press ENTER/PROGRAM to advance to the next display.
7	TIME: 5:30 16-JUN-91 COUNTS: 280	This display reports the initiation time of the sample and the number of pump counts to liquid detection in the sample delivery cycle. These values indicate changes in the sampling conditions – head changes, for example. Press ENTER/PROGRAM to advance to the next display.
8	↓ ↓	Press ENTER/PROGRAM to continue to review the information for the remaining sample events.
9	PROGRAM FINISHED AT 12:00 20-JUN-91	Press ENTER/PROGRAM to return to the “REVIEW PROGRAM” display.
10	REVIEW PROGRAM [*NO*, SETTINGS, RESULTS]	Select “NO” to return to standby.
11	. . . STANDBY . . . 15:39:50 19-JUN-91	

Error Messages and Missed Samples

The probable cause of any missed sample is reported after the sample number/source display. A missed sample display is illustrated below.

SAMPLE MISSED:
NO LIQUID DETECTED!

Ten causes are tracked and reported:

Pump ’STOP’ Key Hit! - The sampler was halted with the STOP key during the sample event.

Pump Jammed! - The sampler was unable to take the sample because the pump jammed.

Started Too Late! - The sampling routine was started after the programmed start time for the first sample. This message is reported for all samples skipped because of an expired start time.

Program Halted! - The sampling routine was interrupted by the STOP or EXIT PROGRAM key when the sample event was to occur.

Power Lost! - The sampler was unable to take the sample because the sampler’s power source was disconnected.

Sampler Inhibited! - The sampler was prevented from taking the sample by an inhibit signal sent to the sampler by a Flow Meter or a Liquid Level Actuator.

Float/Weight Tripped! - Samplers detect overflow with a calibrated weight table supporting the composite bottle in the refrigerator. If the liquid level of the bottle raises the weight of the bottle past the trip point, the sampler will interrupt the sample event and record the “Float/Weight Tripped” condition.

No More Liquid! - The sampler was unable to take the sample because, in attempting to take the sample, the sampler pumped all liquid from the flow stream.

No Liquid Detected! - The sampler was unable to take the sample because no liquid was detected.

Sampler Shut 'Off'! - The sampler was unable to take the sample because it was halted with the ON/OFF key during the sample event.

RUN STATE

A sampler in the run state is executing the sampler's instructions according to the settings you've entered in the program and configure sequences.

To start a sampling program and place the sampler into the run state, press the START SAMPLING key. While running the sampling program, the sampler will present a number of displays which allow you to monitor the sampler's progress. The displays are listed with a brief explanation in **Table 9**.

If a problem is encountered while running a sampling routine which has resulted in missed samples, an asterisk will appear in the lower right corner of the display, as illustrated below.

```
SAMPLE 17 OF 48
AT  6:00        5:42:33 *
```

There is one condition under which the sampler will enter the run state after the START SAMPLING key is pressed, but will not begin the sampling program. If the sampler is interfaced with a 3200 or 4200 Series Flow Meter, 4100 Series Flow Logger, Liquid Level Actuator, or other equipment capable of transmitting an inhibit signal, the sampler will not begin the program until the inhibit signal is suspended. The sampler will use the following display to inform you that the sampler is inhibited.

```
SAMPLER INHIBITED!
10:32        16-JUN
```

Table 9 Run State Displays: Composite Sampling

SAMPLE 1 OF 12 AT 6:00 5:43:33	Indicates the sample number of the next sample and the total number of samples for time-paced routines. The current time is shown in the lower right corner.
SAMPLE 1 OF 12 AFTER 10 PULSES	Indicates the sample number of the next sample and the total number of samples for flow-paced routines.
SAMPLE 2 OF ??? AT 6:00 5:43:33	Indicates the sample number of the next sample. The question marks indicate the sampler will use the weight table to terminate the routine. The second line reports the scheduled time of the upcoming sample event and the current time.
SAMPLE 1 OF ??? AFTER 100 PULSES	Indicates the sample number of the next sample. The question marks indicate the sampler will use the weight table to terminate the routine. The second line reports the number of flow pulses remaining until the next sample event.
SAMPLE 2 OF 12 PUMPING 200 ml	Indicates a sample in progress.

Chapter 4 Routine Maintenance

Routine Maintenance

This chapter discusses routine maintenance necessary to keep the refrigerator in top operating condition. Included are sections on the weather and corrosion resistance of the refrigerator and cleaning the refrigerator.

The 3710R/3710VR/3750, although ruggedly built to withstand difficult field operating conditions, will maintain maximum reliability when these simple maintenance procedures are followed. As with any piece of field operated equipment, a certain amount of preventive maintenance is necessary to keep it functioning properly.

Weather and Corrosion Resistance

The refrigerator's exterior is fabricated from either Type 304 brushed stainless steel or vinyl clad steel. The remainder of the exposed metal parts are either anodized or Iridited™ aluminum. The controller cover and base are constructed from ABS (acrylonitrile-butadiene-styrene) plastic, as is the bottle locating base. The controller's electronics and mechanisms are protected by a totally sealed Noryl™ (polyphenylene oxide) control box. The control box is rated at NEMA 4X, 6.

The 3710R and the stainless steel 3750 Refrigerator are designed to be operated in relatively hostile environments. They may be directly exposed to wet environments and still function properly. The refrigerator's mechanical and electrical components, and the sampler controller are protected from rain, accidental spray, etc. The 3710VR and the vinyl 3750 Refrigerator offer protection similar to that of the stainless steel model, except to a limited degree. After prolonged exposure, the vinyl clad steel exterior may begin to corrode. This will not cause any functional problems though; only the refrigerator appearance will be damaged.

If the refrigerator is to be operated out-of-doors, in a corrosive atmosphere, or in a wet environment for prolonged periods, it is highly advisable to further protect it with a fabricated shelter or instrument enclosure. Enclosures specifically made for the 3710R/3710VR/3750 are available from COSYSCO (P.O. Box 4837, Walnut Creek, CA 94596, 415-947-5756) and Plasti-Fab (P.O. Box 100, Tualatin, OR 97062, 503-692-5460).

Cleaning

The following sections present information on cleaning the sample bottles and pump tubing. Information is also included for cleaning the refrigerator's interior, exterior, condenser coil, and bottle locating base.

Tubing

The Teflon suction line and the pump tubing can be cleaned by placing the end of the suction line in a cleaning solution and pumping this solution through the tubing system using the PUMP FORWARD and PUMP REVERSE keys. Follow with a clean water rinse.

Sample Bottles

The bottles have a wide mouth to facilitate cleaning and can be washed with a brush and soapy water or washed in a dishwasher. The glass bottles can be autoclaved; however, the plastic lids and bottles should **not** be autoclaved.

Cleaning Protocols for Priority Pollutants

The following sections are excerpted from U.S. Environmental Protection Agency Publications EPA-600/4-77-039 ("Sampling of Water and Wastewater" by Dr. Phillip E. Shelley) to provide an example of sampler cleaning procedures for priority pollutants.

Proper Cleaning

Proper cleaning of all equipment used in the sampling of water and wastewater is essential to ensuring valid results from laboratory analysis. Cleaning protocols should be developed for all sampling equipment early in the design of the wastewater characterization program. Here also, the laboratory analyst should be consulted, both to ensure that the procedures and techniques are adequate, as well as to avoid including practices that are not warranted in view of the analysis to be performed.

Cleaning Examples

As an example, Lair (1974) has set down the standard operating procedures for the cleaning of sample bottles and field procedures equipment used by USEPA Region IV Surveillance and Analysis field personnel engaged in NPDES compliance monitoring. They are reproduced following for a typical automatic sampler and related sampling equipment.

Isco Glass Sample Bottles:

1. One spectro-grade acetone rinse.
2. Dishwasher cycle (wash and tap water rinse, no detergent).
3. Acid wash with at least 20 percent hydrochloric acid.
4. Dishwasher cycle, tap and distilled water rinse cycles, no detergent.
5. Replace in covered Isco bases.

Suction Line (1/4 or 3/8 inch Vinyl):

1. Do not reuse sample tubing. No cleaning required. New sample tubing is to be used for each new sampling setup.
2. Use Teflon tubing where samples for organics are to be collected.

Isco Pump Tube:

1. Rinse by pumping hot tap water through tubing for at least 2 minutes.
2. Acid wash tubing by pumping at least a 20 percent solution of hydrochloric acid through tubing for at least 2 minutes.
3. Rinse by pumping hot tap water through tubing for at least 2 minutes.
4. Rinse by pumping distilled water through tubing for at least 2 minutes.

Teflon Tubing:

1. Rinse twice with spectro-grade acetone.
2. Rinse thoroughly with hot tap water using a brush if possible to remove particulate matter and surface film.
3. Rinse thoroughly three times with tap water.
4. Acid wash with a solution of at least 20 percent hydrochloric acid.
5. Rinse thoroughly three times with tap water.
6. Rinse thoroughly at least three times with distilled water.
7. Rinse thoroughly with petroleum ether and dry by pulling room air through tubing.
8. Dry overnight in warm oven (less than 150° F), if possible.
9. Cap ends with aluminum foil.

Cleaning the Refrigerator

The refrigerator's exterior may be periodically cleaned with soapy water using a sponge or non-metallic brush to keep it free from corrosive solutions, grease, oil, etc. After cleaning, it should be wiped dry. Automotive wax may be applied to the interior and exterior surfaces of the refrigerator to make them easier to clean and more resistant to corrosion. Do not direct a hose spray toward the underside or into the front grille of the refrigerator. The vacuum formed plastic refrigerator interior and weight table may also be cleaned with soapy water as necessary.

Because the refrigerator uses a forced-air system for cooling the compressor and condenser coil; dust, lint, and other debris will be pulled into the unit and will eventually accumulate on the condenser coil and other components in the air circulation path. If the refrigerator is not cleaned periodically, damage due to overheated components may result.

⚠ WARNING

Be sure to disconnect the refrigerator's power before performing any service activities.

The condenser coil and surrounding areas should be cleaned annually; more frequently under severe operating conditions. To clean,

1. Remove the screws that hold the back panel on to the refrigerator and remove the panel.
2. Vacuum the fan, compressor, and all of the surrounding areas.
3. Check the fan for freedom of movement. Oiling the fan motor is not necessary because the motor bearings are sealed. If the fan motor does not rotate freely, it should be replaced.
4. Replace the back panel.
5. Remove the front grille. Vacuum the condenser coil and surrounding areas.
6. Replace the grille.

Cleaning the Bottle Locating Base and Sample Bottles

The bottle locating base may be cleaned with soapy water and a sponge.

The sample bottles have a wide mouth to facilitate cleaning. The 2.5 gallon glass bottle may be washed with a brush and soapy water then washed in a dishwasher or autoclaved. The 2.5, 4, and 5.5 gallon polyethylene bottles may be washed with a brush and soapy water or washed in a dishwasher, but not autoclaved.

Replacement of Pump Tubing

The pump tube serves two functions: it is a pump tube in the peristaltic pump and a distribution tube, routing the sample liquid from the pump outlet to the sample bottle. The pump tube consists of a single 40.5 inch (104 cm) piece of medical grade Silastic™ silicone rubber tubing. Medical grade tubing is used because of its superior mechanical properties and because it does not contain any organic materials. Non-medical grade silicone rubber tubing can contain organic vulcanizing agents.

During the vulcanizing process, these agents are converted into other compounds which can be leached into the sample. The medical grade silicone rubber tubing supplied by Isco for use with the sampler will **not** contribute any organic material to the sample.

Inspection of Pump Tubing

The pump tubing is extremely durable. However, the constant mechanical strain placed on the tubing by the peristaltic action of the pump will eventually cause the tubing to fatigue and fail. Inspect the pump tubing periodically for wear inside the pump by removing the cover. Check the tubing for cracks where the pump roller compresses the tubing. Replace it with a new pump tube, if necessary.

The inspections should be fairly frequent when the liquid being sampled contains a high percentage of suspended solids. If the liquid is relatively free of solids, the inspections can be less frequent. The Tubing Life configure option reports the number of pump counts elapsed during the life of the pump tube.

The amount of tubing (13.5 inches) used in the pump is less than half the total length of the pump tube (40.5 inches). In some cases, when the tube has not been damaged to the point of leaking, the tube can be used twice by simply turning it around.

Note: The black bands used to assist you in correctly positioning the tubing in the pump and detector are placed on one end only. If you turn the tubing around, you will not be able to use the bands for reference.

Removing the Pump Tubing

To remove the tubing:

1. Disconnect power from the unit.

⚠ CAUTION

Be sure power is disconnected from the unit before exchanging the pump tubing. The pump is extremely powerful. If the sampler activates the pump while you are manipulating the tubing, serious injury can result.

2. Detach the outer cases of the liquid detector and pump by loosening the captivated thumbscrews shown in **Figure 16**. This will expose the pump tubing as shown in **Figure 17**.
3. Pull the tubing away from the detector. Extract the tubing from the pump. The pump rollers can be rotated manually to facilitate the removal of the tubing. After the tubing is removed, clean the interior of the pump case thoroughly.
4. Remove the suction line, if attached, and pull the pump tubing from the pump tube port.

Installing a New Pump Tube

The steps below outline the procedure needed to install a new pump tube.

1. The pump tube is marked with two black bands. These bands are used to correctly locate the tubing in the detector and pump. Correct placement is critical to prolong the life of the pump tube and to assure efficient operation and accurate sample volumes. Facing the liquid detector, place the inner edge of the end band against the upper left inlet of the liquid detector. Place the inner band at the lower outlet of the liquid detector. **Figure 17** shows the correct placement of the tubing at the liquid detector.
2. Slip the pump tubing under the rollers so that the pump tubing does not interfere with the installation of the outer pump lid.
3. Replace the outer pump lid and tighten the four thumbscrews.
4. Re-check the position of the marker bands and adjust the tubing if the position of the bands indicate the tubing has slipped.
5. Replace the outer case of the liquid detector. For proper operation of the liquid detector, tighten the thumbscrews securely.
6. Feed the free end of the tube down through the pump tube port.
7. Re-install the suction line, as described in *Attaching the Suction Line* on page 8.
8. Reset the Pump Tube count to zero. Refer to the discussion of the Tubing Life configure option in *Tubing Life* on page 40.

Replacement of Suction Line

It may be desirable to replace the suction line for one of several reasons. The suction line may be worn, cut, contaminated, or otherwise damaged. Periodically inspect it for damage. In critical sampling, it may be necessary to replace the suction line between sampling programs to avoid cross contamination.

Figure 16 Liquid Detector and Pump Case

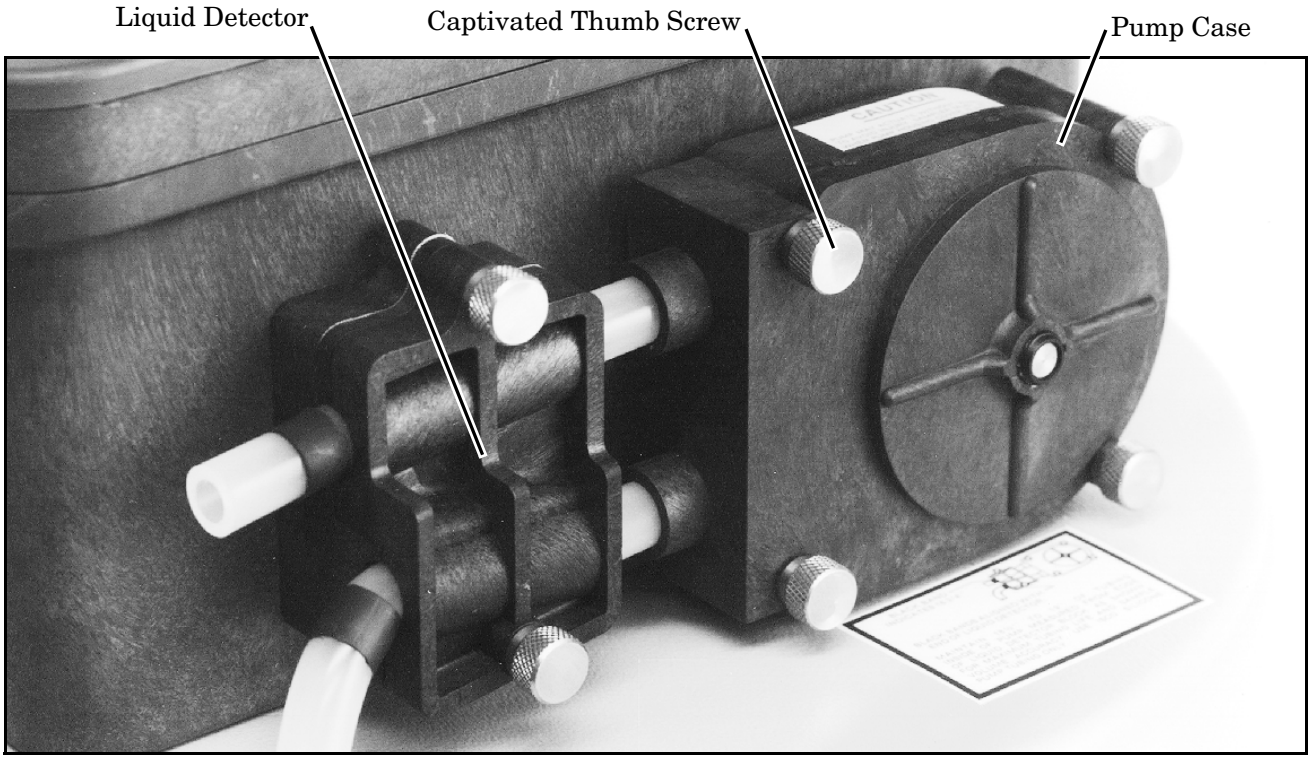

Figure 17 Interior of Liquid Detector and Pump Case

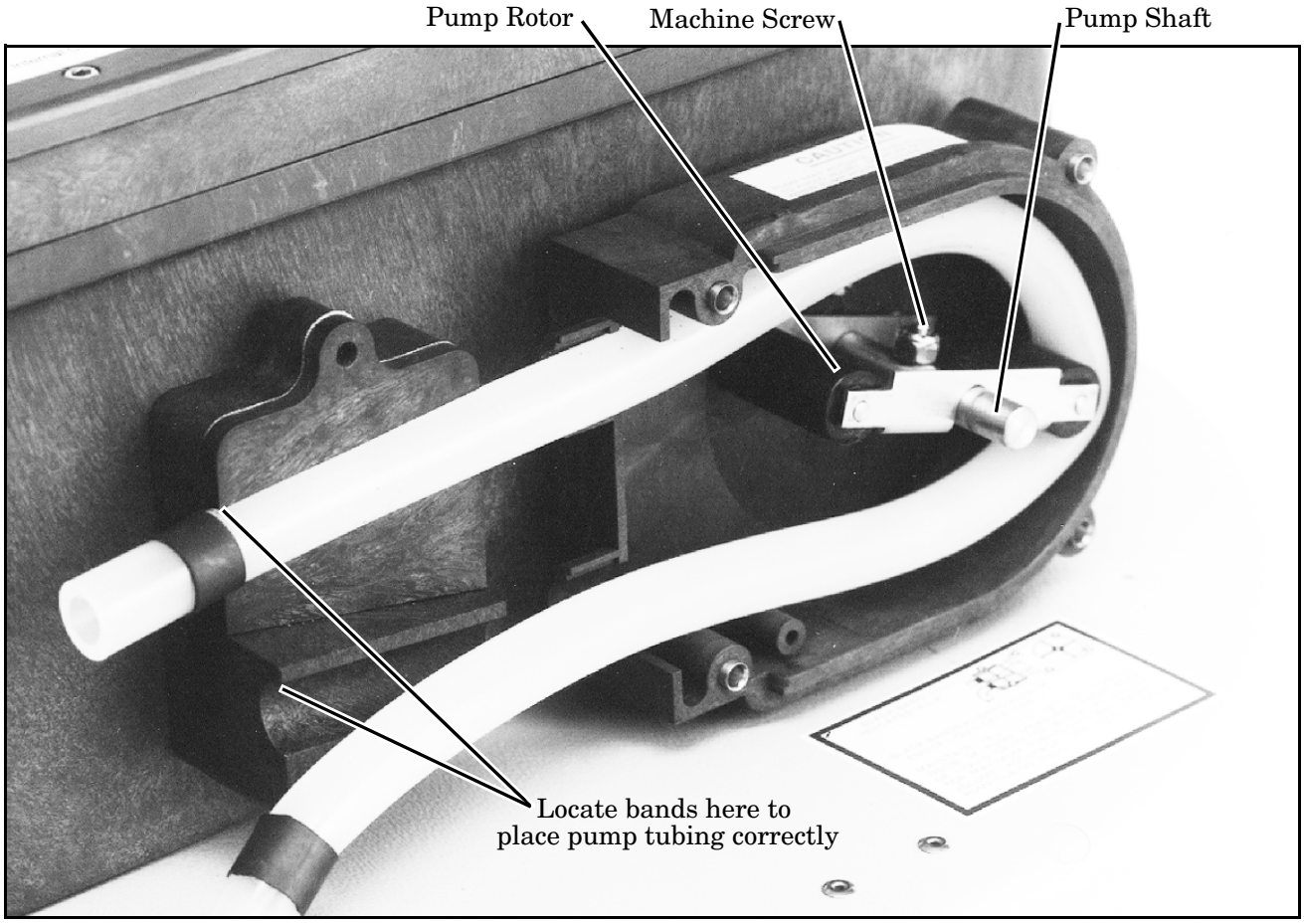

When sampling site conditions change, it may be necessary to replace the suction line with a different diameter or type of line (vinyl or Teflon). The vinyl suction line contains a very low PPM (parts per million) level of phenols. If this affects your samples, use the Teflon line.

Cleaning Suction Line

The suction line and the remainder of the pump tube system should be cleaned occasionally as described in *Tubing* on page 61.

Replacement Vinyl Line

Replacement vinyl suction lines are available from Isco in two forms. First, a complete suction line, with weighted strainer and tube coupling, is available in 10 ft. and 25 ft. lengths for each of the ¼ inch and ⅜ inch ID (Inside Diameter) vinyl suction lines. Second, bulk suction line in the ¼ inch ID and ⅜ inch ID vinyl tube is available in 100 and 500 ft. rolls.

Replacement Teflon Line

The ⅜ inch ID Teflon suction line is available from Isco in line lengths of 10 and 25 feet.

¼ and ⅜ Inch ID Vinyl Suction Line

The following sections discuss the replacement of the complete suction line-strainer assemblies, the sizing of the suction line, and the assembly and installation of the bulk tubing. The suction line is removed from the pump tubing by detaching the tube coupling, as described in *Attaching the Suction Line* on page 8. If a complete new suction line-strainer assembly of the standard 10 or 25 ft. length is used, it should be installed as described in *Placement of the Suction Line and Intake* on page 9.

Bulk Suction Line

If you are using bulk suction line to replace the old line, detach the old line from the tube coupling. Remove the strainer by loosening the hose clamp which secures the strainer to the line. Cut the new suction line to the desired length in one foot increments. The line must be between 3 and 99 feet long. To insure accurate sample volumes, it is important that the line is cut in one foot increments and that the line length is correctly entered in the Suction Line configure option. See *Suction Line* on page 33. Install the strainer on the new suction line and tighten the hose clamp.

The new suction line can now be installed in the pump as described in *Attaching the Vinyl Suction Line to the Pump Tubing* on page 8.

⅜ Inch ID Teflon Suction Line

The suction line is removed from the pump by loosening the clamp which secures the line to the pump tube and pulling the suction line out of the pump tube. If a new suction line (either with or without the optional stainless steel strainer) is to be used, it is installed as described in *Attaching the Teflon Suction Line to the Pump Tubing* on page 9. To install the optional stainless steel strainer, carefully slip the strainer's tapered connector inside the suction line and tighten the hose clamp supplied with the strainer.

Changing the Internal Desiccant

A humidity indicator, labeled "INTERNAL CASE HUMIDITY," is located in the lower left corner of the control panel. It indicates the amount of moisture present inside the control box. The paper indicator is blue in a dry state.

The control box is a completely sealed unit. (The control box does not need to be opened during normal operation.) The desiccant should absorb any moisture which may accumulate in the control box. Thus, the humidity indicator should remain blue under normal conditions. If moisture does accumulate, the numbered areas on the indicator will turn light pink or white, starting with the area numbered "20." This indicates that the relative humidity inside the control box exceeds 20%. As more moisture accumulates, the areas numbered "30" and "40" will turn light pink or white, indicating relative humidities of 30% and 40%.

If the 30% area of the humidity indicator turns light pink or white, the control unit should be opened, inspected for leaks, and the desiccant renewed. This is done by unscrewing the ten screws (**Figure 18**) around the outer rim of the control box bezel, and carefully lifting the bezel and cover off the control box. The control box contains electronic circuitry which may be damaged by static discharge. Open the control box only in a static free environment.

Renewing the Desiccant

The desiccant is renewed by first removing the bags of desiccant from the control box, as shown in **Figure 19**. Then place a sheet of brown paper on a flat metal sheet. You can use a brown grocery bag and a typical cookie sheet. Place only the bags on the sheet. Do not stack the bags on top of each other or allow them to touch. Place in a vented, circulating forced air, convection oven in a well ventilated room. Allow two inches of air space between the top of the bags and the next metal sheet above the bags.

Keep the sheets a minimum of 16 inches from the heating element. Heat the bags at a temperature of 240° to 250° F (116° to 121° C) for 12 to 16 hours. At the end of the time period, the bags should be immediately removed and placed in an airtight container for cooling. The desiccant will be recharged to approximately 80% to 90% of its previous capacity. After repeated recharging, the desiccant bag may require replacement.

Some bags will have the temperature and time for recharging printed on the bag. If they differ, use the temperature and time printed on the bag.

To reassemble the controller, place the renewed desiccant in the tray as shown in **Figure 19**. If you have disconnected any wiring or the grounding strap between the control box and the panel, reconnect them. Before reinstalling the cover, coat the cover's gasket with a light film of silicone grease to seal the control box. Tighten the ten screws which hold the control box cover and bezel in place using an even cross-torquing pattern.

Figure 18 Location of 10 Screws on Control Box Bezel

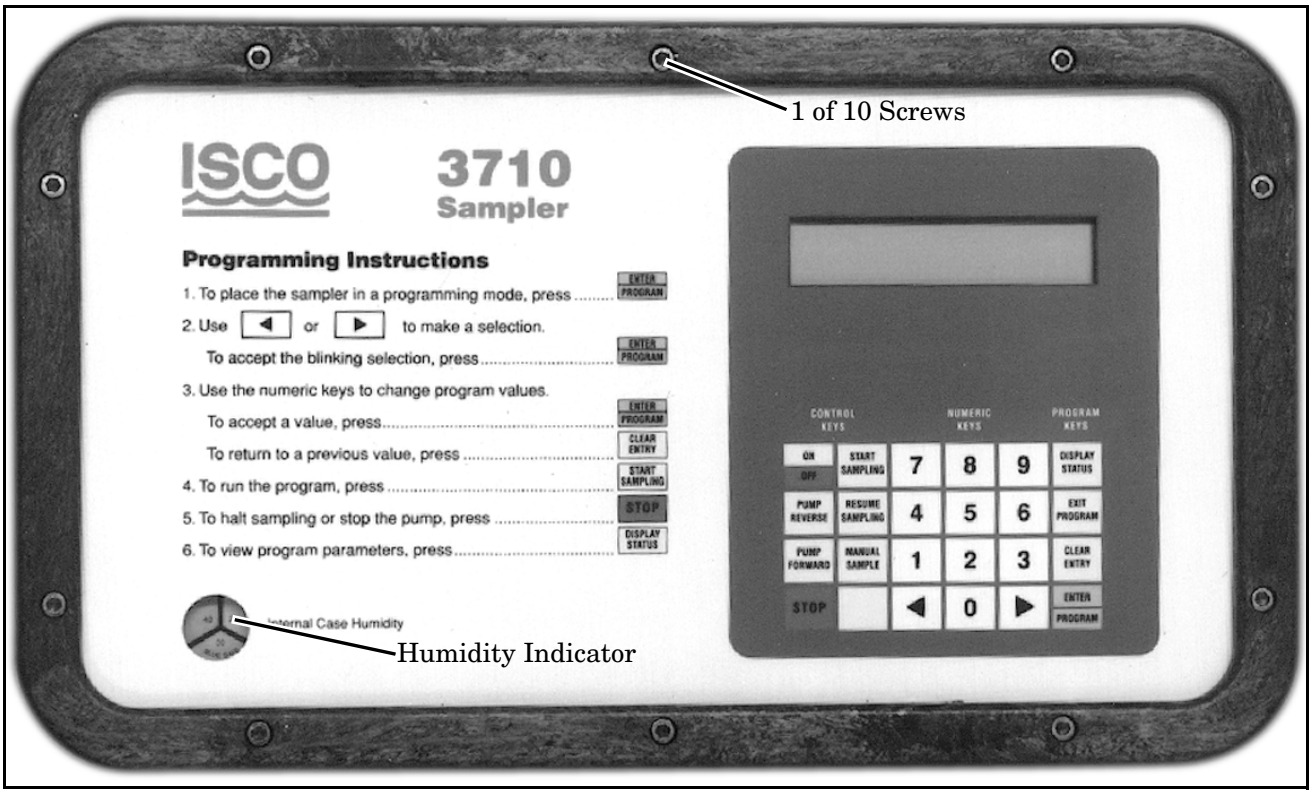

Figure 19 Control Box Internal Desiccant

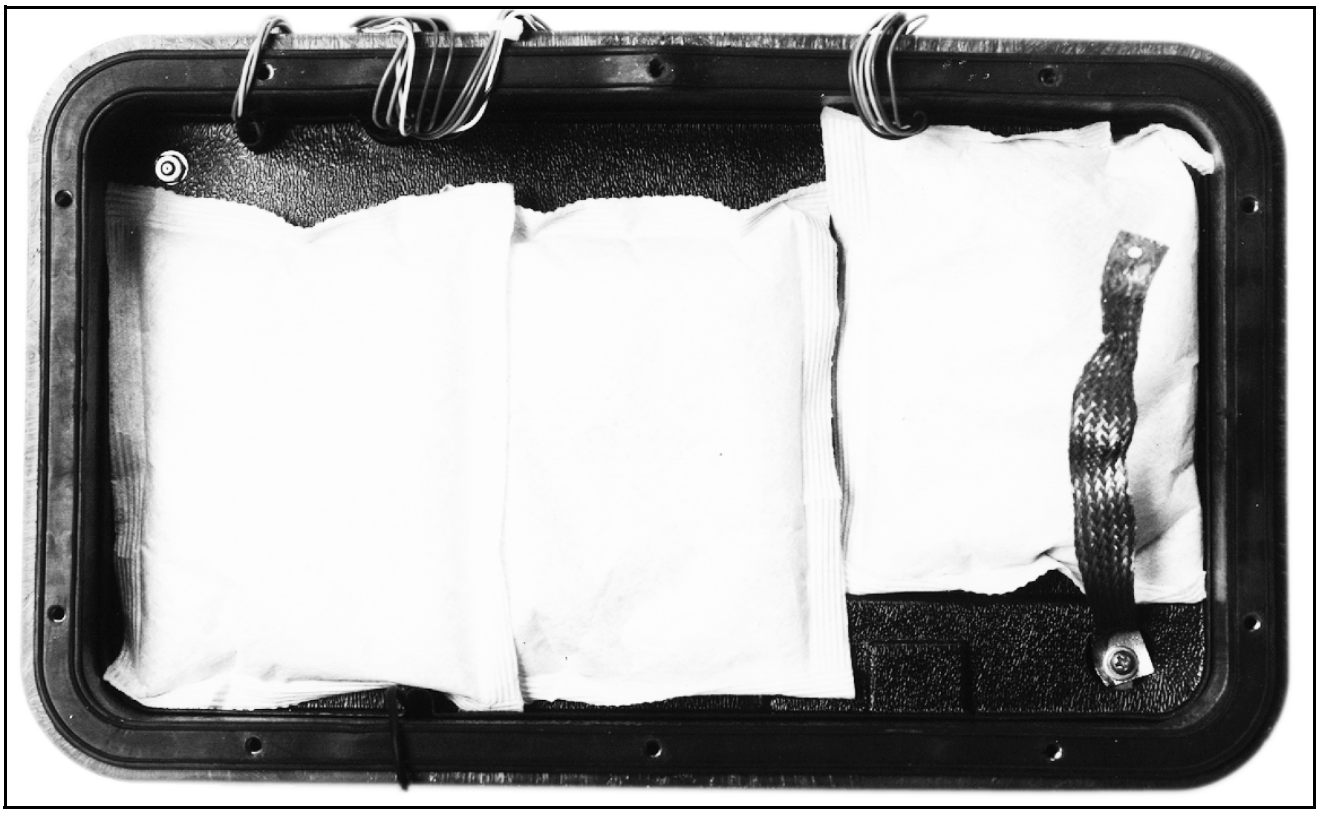

Chapter 5 Options and Interfacing Equipment

INTRODUCTION

This chapter presents information regarding the major options available with the 3710R/3710VR Sampler. The following sections present a general description of the options.

- *Flow Meter Connections*.
- *Interface Devices*.
- *Model 1640 Liquid Level Actuator*.

FLOW METER CONNECTIONS

The sampler can collect samples on a flow proportional basis using flow inputs from an external flow meter. The sampler requires a 5 to 15 VDC pulse of at least 25 millisecond duration to register a flow pulse. Flow meters are connected to the sampler by attaching a flow meter connect cable to the flow meter connector located on the control base. **Figure 6** on page 11 shows the connector.

NOTE

If a connect cable is not attached to the flow meter or printer connectors, be sure that the protective covers are tightly fastened in place.

The sampler has an additional connector, labeled "PRINTER," used to connect the sampler to an Isco Field Printer, Field Interrogator, or laptop computer. **Figure 20** shows the pin location diagram for the printer connector. (Note: Both the flow meter connector and the printer connector use the same 6-pin configuration.) The printer cable connector accepts both the connector from the Isco Field Printer and the cables from the laptop computer or 583 Field Interrogator. **Table 10** shows the pinouts for the printer connector.

ISCO FLOW METER

Connect cables to connect the sampler to an Isco flow meter are available. Refer to the *Accessories List* on page 93. To make the connection, attach the appropriate cable connector to the flow meter according to directions in the flow meter instruction manual, and attach the other connector to the 6-pin flow meter connector on the rear of the control base, shown in **Figure 6** on page 11.

NON-ISCO FLOW METERS

Certain non-Isco flow meters can be directly interfaced with the sampler. These are flow meters with an isolated contact closure type output of at least 25 millisecond duration. The frequency of the contact closures must be directly proportional to total flow.

The isolated contact closure from the flow meter should be connected to pins A and C of the 6-pin connector. **Table 11** shows the pinouts required for connecting a flow meter to the sampler. **Figure 20** shows a diagram of the pin locations on the 6-pin connector. Refer to the instruction manual of the flow meter being used for further details.

A connector and cable clamp to connect a non-Isco flow meter to the sampler are available from Isco. To wire the connector for contact closures, use pins A and C. To wire the connector for pulses, use pin C. When appropriately wired, attach the non-Isco connector to the flow meter connector on the rear of the sampler.

A connector prewired to a 22-foot (6.7-meter) cable terminating in two wires is also available. The black wire is connected to pin A, and the white wire is connected to pin C.

Figure 20 Pin Location for 6-pin Connector

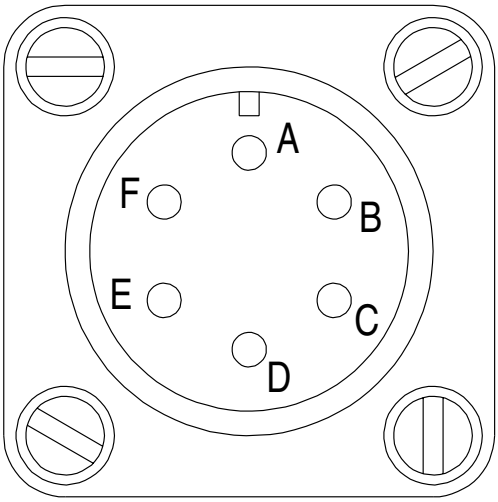

Table 10 6-Pin Printer Connector Wiring

Pin	Signal
A	+12 VDC
B	Common
C	Printer Sense
D	Transmit
E	Receive
F	NC

Table 11 6-Pin Flow Meter Connector Wiring

Pin	Signal
A	+12 VDC
B	Common
C	Flow Pulses In
D	Weight Table
E	Event Mark Out
F	Inhibit In

INTERFACE DEVICES

The sampler can also be used with flow meters having other types of outputs, for example, a 4 to 20 mA output directly proportional to flow rate. However, these flow meters require a special interface device to convert their output signal into one compatible with the sampler. Two interfaces are available: the Type A Interface and the 4 - 20 mA Sampler Input Interface. Each interface connects to the flow meter connector. Consult the factory for assistance in interfacing the sampler with non-Isco flow meters.

Type A Interface - Converts flow pulse duration output from non-Isco flow meters to acceptable flow pulses. The Type A interface is shown in **Figure 21**.

4-20 mA Sampler Input Interface - Converts 4 to 20 mA output signals from non-Isco flow meters to acceptable flow pulses. The 4-20 mA Sampler Input Interface is shown in **Figure 22**.

MODEL 1640 LIQUID LEVEL ACTUATOR

The Liquid Level Actuator is a device used to begin a sampling routine when the liquid level of the sample flow stream reaches a predetermined height. The actuator is used to inhibit sampling according to flow levels; i.e., if the level of the flow stream falls below the actuator's probe, the actuator will inhibit sampling until the level again rises to contact the probe.

The actuator can be set to control the sampler in two modes:

Latch Mode - The sampler continues the sampling routine even though the liquid level has receded and liquid no longer contacts the sensor.

Toggle Mode - The sampler will halt the routine when the liquid ceases to contact the sensor.

To connect the actuator to the sampler, attach the actuator cable to the flow meter connector. Refer to **Figure 6** on page 11 for the location of the flow meter connector. Refer to the Liquid Level Actuator Instruction Manual for additional information.

The sampler must be configured to respond to the actuator. Refer to the discussion of the Enable Pin configure option, *Enable Pin* on page 39.

Figure 21 Type A Interface

Figure 22 4-20 mA Sampler Input Interface

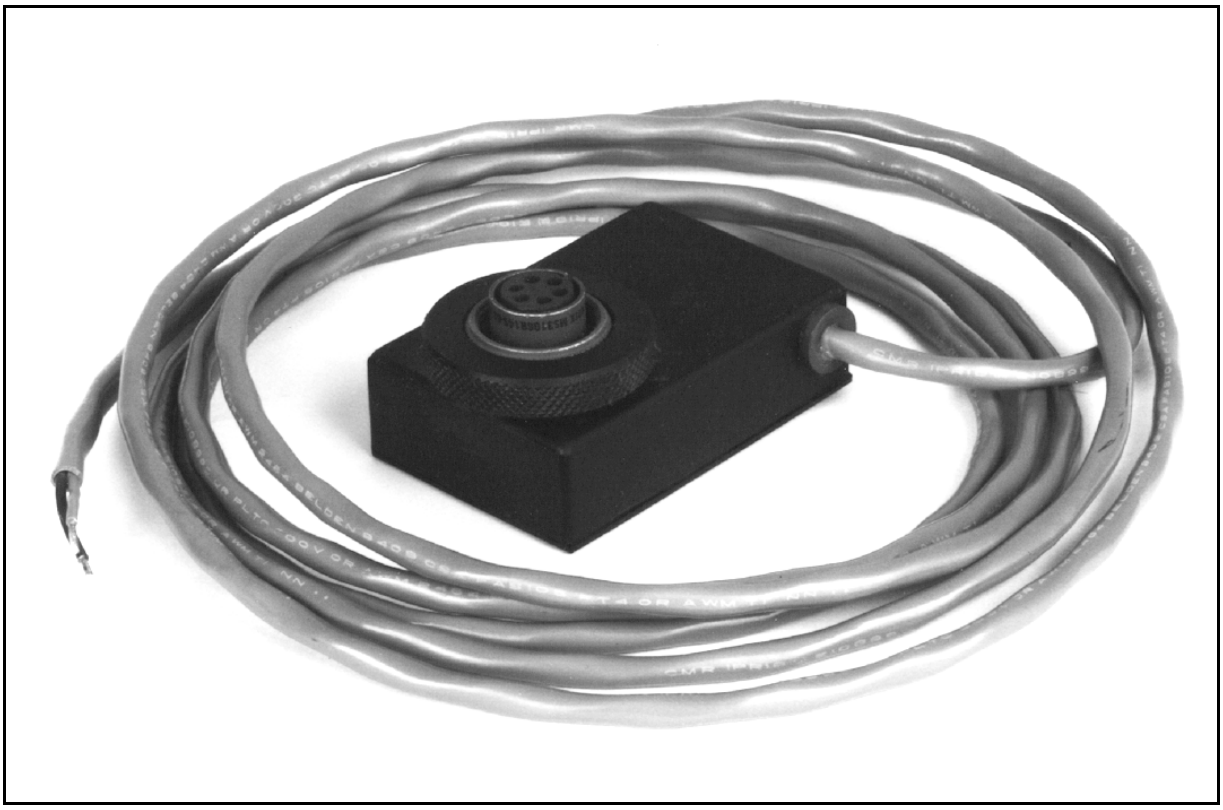

Chapter 6 Servicing

Servicing Information

This chapter presents refrigerator servicing information to assist you in correcting malfunctions which may occur. Included are sections providing information on the electrical and refrigeration systems, and on servicing the sampler's controller. An illustrated list of common replacement parts is also included.

The electrical system is discussed on page 71.

The refrigeration system is discussed on page 71.

Servicing information for the electronic components is discussed on page 71.

Electrical System

Electrical circuit schematics for the refrigerator and the sampler's 12 VDC power supply are shown in **Figures 24** and **25**.

⚠ WARNING

Be sure to disconnect the refrigerator's power before performing any service activities.

You can gain access to the electrical and refrigeration components by removing the back panel of the refrigerator. To gain access to the sampler controller's 12 VDC power supply, place the refrigerator on its side and remove the bottom plate and back panel.

The refrigerator compressor is equipped with external overtemperature and overload protection, and may fail to start immediately when power to the unit is momentarily interrupted or when the thermostat setting is changed. It is normal for the overload relay to trip repeatedly in these instances, and in no way indicates a malfunction.

Refrigeration System

The refrigeration system is shown schematically in **Figure 23**. Refrigerator's before S/N 11901-001 are charged with 8.5 ounces of R-12 refrigerant. Refrigerator's after S/N 11901-001 are charged with 3.4 ounces of R-134a. All refrigeration repair work must be performed by a qualified refrigeration technician.

Figure 23 Refrigeration Schematic Diagram

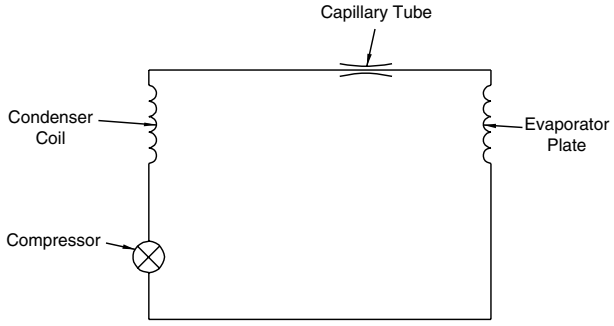

Servicing the 3710 Controller

The electronic circuitry of the sampler controller is solid-state and its reliability is high. If the unit should fail to operate properly, items such as a broken or intermittent connection in the power cable or wiring harness should be suspected.

If Serious Problems Occur

If the sampler fails to operate properly, call the Isco Technical Service Department. The service department will provide information on how to return the sampler to the factory for repair. For example, the pump assembly or control box can be removed and returned separately for servicing. Contact:

Technical Service Department
Isco, Inc.
P.O. Box 82531
Lincoln, NE 68501 USA
Toll free: (800) 228-4373 (USA, Canada, & Mexico)
Phone: (402) 464-0231

Figure 24 3710R/3710VR/3750 Electrical Schematic – From S/N 196C01812

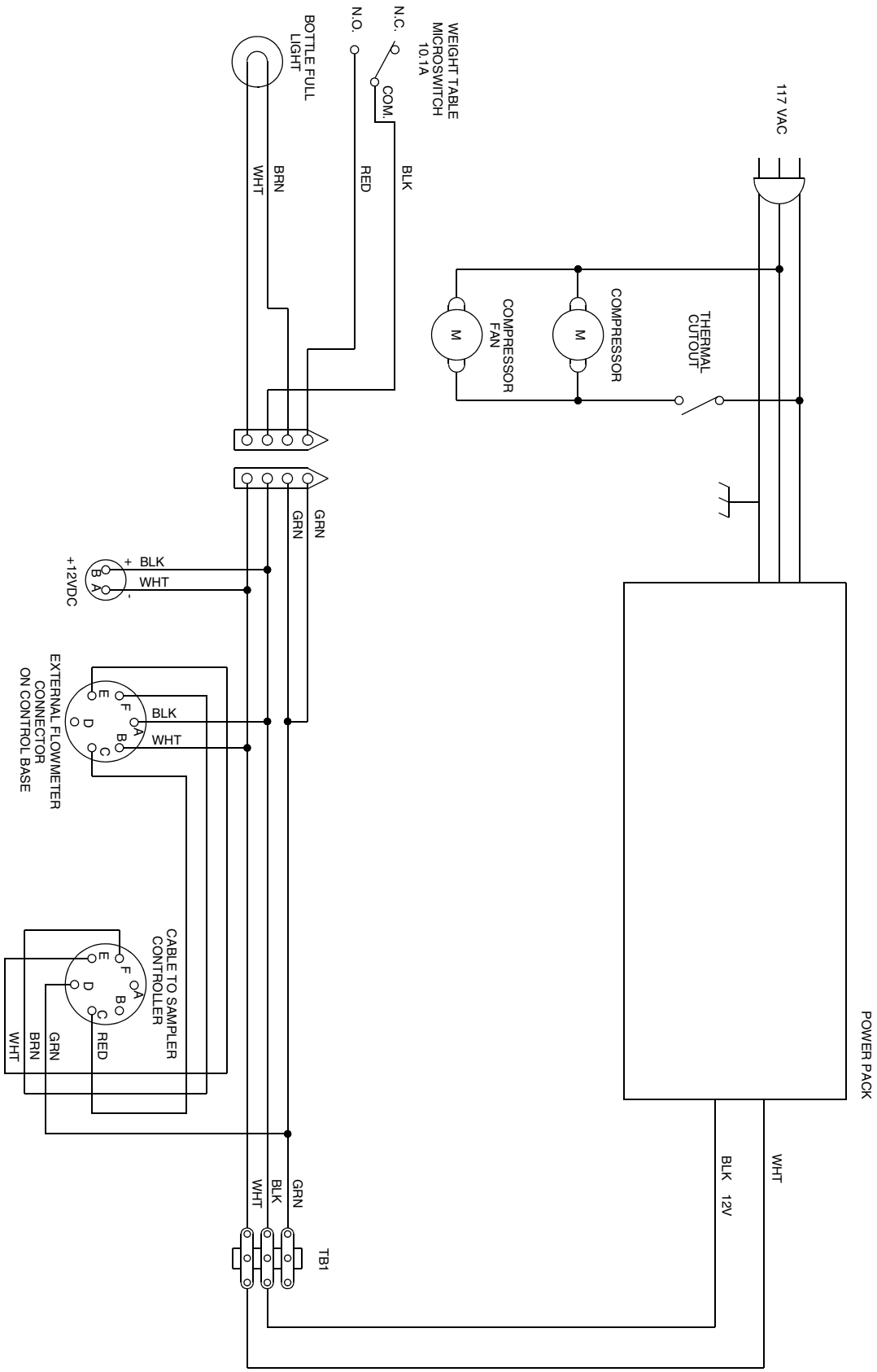

Figure 25 3710R/3750 Electrical Schematic – Before S/N 196C01812

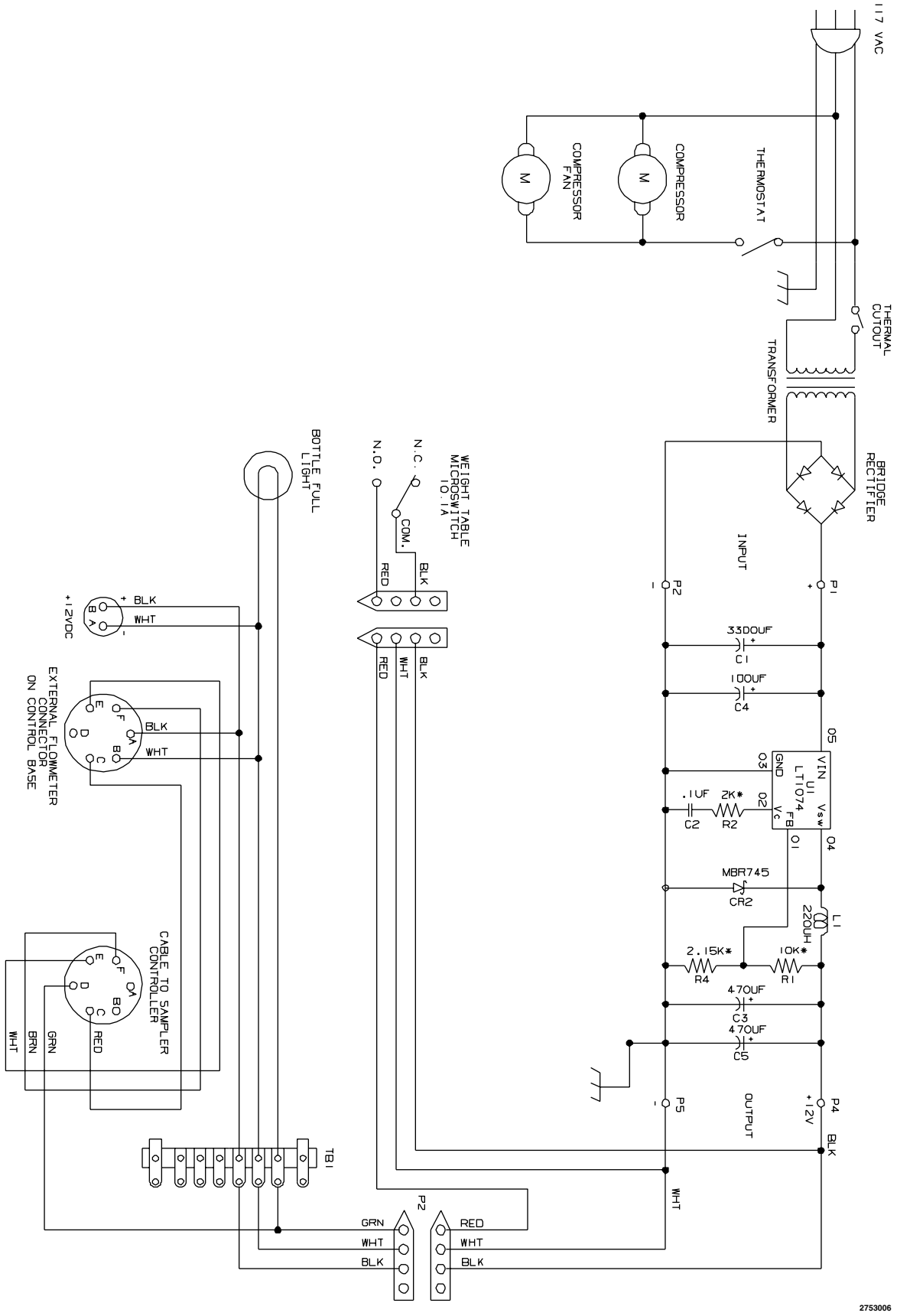

Installing a 3710 Controller on the 3750 Refrigerator

The 3750 Sampler Refrigerator is available to convert a 3710 Portable Sampler into a 3710R or a 3710VR Refrigerated Sampler. To do this, remove the control box from the portable sampler following the instructions in the *3710 Portable Sampler Instruction Manual*. Because of the longer distance between the pump discharge and the sample bottle in the refrigerator, the standard 36 inch (92 cm) pump tube must be replaced with the 40.5 inch (104 cm) pump tube supplied in the mounting kit. The new pump tube may be installed following the instructions in *Installing a New Pump Tube* on page 63 of this manual.

Once the new pump tube is installed, use the parts supplied in the controller mounting kit and follow the instructions below to prepare and mount the controller on the refrigerator. Refer to **Figure 26**.

1. Turn the controller upside down and screw the four, threaded mounting rods into the four corner feet of the controller. The two middle feet are not used. The controller can now be installed on the refrigerator.
2. Open the controller cover on the top of the refrigerator and orient the controller on the top of the unit so the peristaltic pump and liquid detector face the front of the refrigerator.
3. Carefully insert the threaded rods into the four mating holes on the refrigerator and push the controller down until it is resting on the refrigerator. Working inside the refrigerator, install the spacers and wing nuts on the four threaded rods.
4. Feed the pump tube down through the tubing feed through into the interior of the refrigerator and route the pump tube into the bottle. No more than two inches of pump tubing should be suspended in the bottle. Cut off any excess pump tubing.
5. Connect the two-pin connector on the power cable to the 12 VDC plug on the controller and the six-pin connector on the flow meter cable to the flow meter connector.

Access to Electronic Components

To gain access to the electronic components housed in the control box:

1. Disconnect the power source from the sampler.
2. Remove the 10 screws around the outer edge of the control box bezel.
3. Lift the cover and bezel off the control box and turn it over, as shown in **Figure 27**.
4. The control box cover assembly may be disconnected from the control box lower section by disconnecting the four connectors (see **Figure 27**) and the grounding strap.
5. The main circuit board assembly of the 3710 Sampler is protected by an aluminum shield. To remove this shield, unscrew the stop nut that holds the short grounding strap and unscrew the four screws located in each corner of the shield. Lifting the shield off will then reveal the main circuit board shown in **Figure 28**.
6. To remove the circuit board assembly from the control box cover, unscrew the four hex threaded stand-offs and the phillips head screw, indicated in **Figure 28**. The circuit board may now be pulled away from the control box cover.
7. To completely disconnect the circuit board assembly from the cover, disconnect the connector shown in **Figure 28**.

Figure 26 Mounting the Control Box

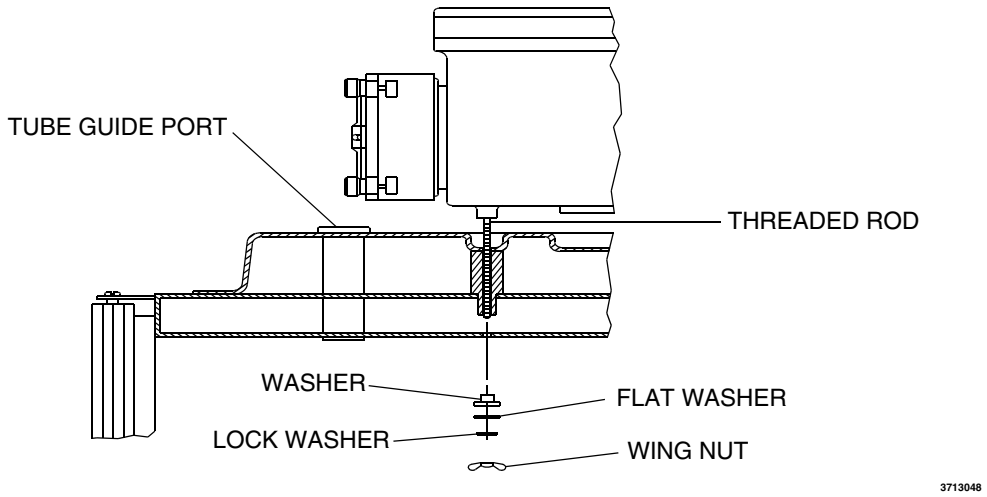

Figure 27 Underside of the Control Box Cover

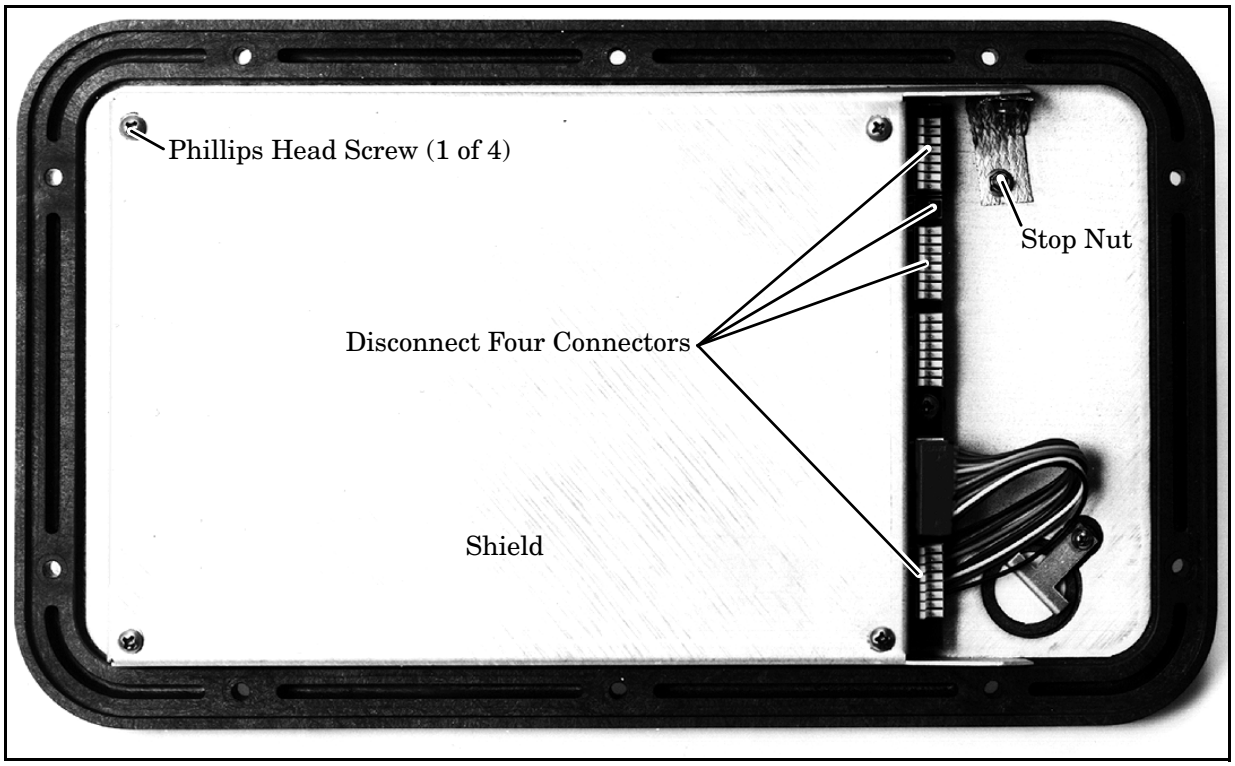

Figure 28 Main Circuit Board

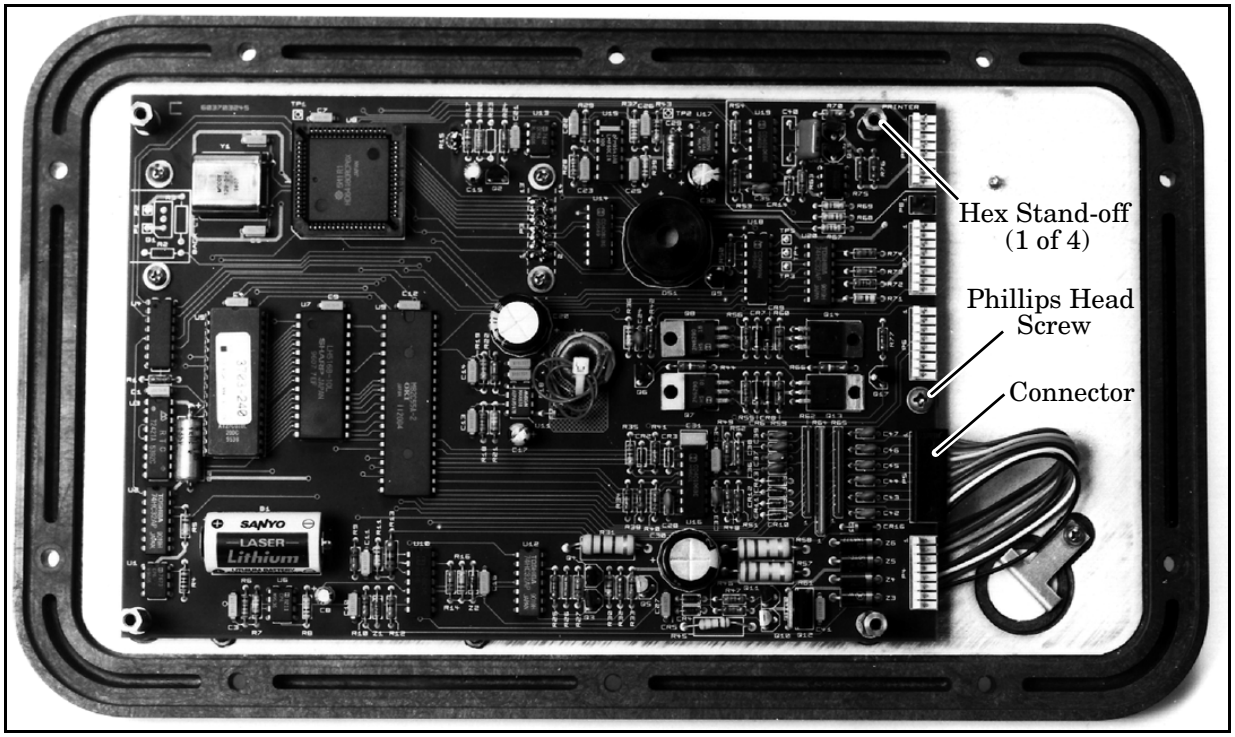

Removal of the Pump Gear Case Assembly

The pump gear case assembly is located in the lower section of the control box. To gain access to the lower section of the control box, follow the instructions in *Access to Electronic Components* on page 74. Use the following steps to remove the pump gear case.

1. Remove the two nuts, the screw, and the grounding strap indicated in **Figure 29**.
2. Lift the plastic tray straight up out of the control box.
3. Remove the liquid detector lid and the pump lid by loosening the captivated thumbscrews on the pump exterior. **Figure 16** on page 64 shows the location of the thumbscrews.
4. Remove the pump tubing from the interior of the pump.
5. Remove the pump rotor by loosening the machine screw and locknut attaching the rotor to the pump shaft. **Figure 17** on page 64 shows the location of the machine screw. Rotate the rotor until you can reach the screw with a screwdriver inserted through the pump case inlet sleeve.
6. Slide the rotor off the pump shaft.
7. Remove the pump case by unscrewing the four screws on the back of pump's inner case.
8. Disconnect the grounding strap between the pump gear case and the shut-off microswitch assembly.
9. Lift the pump gear case assembly out of the control box.

Reverse these step to reassemble the controller. Ensure that all hardware, straps, and connectors are secure.

Figure 29 Control Box Tray Removal

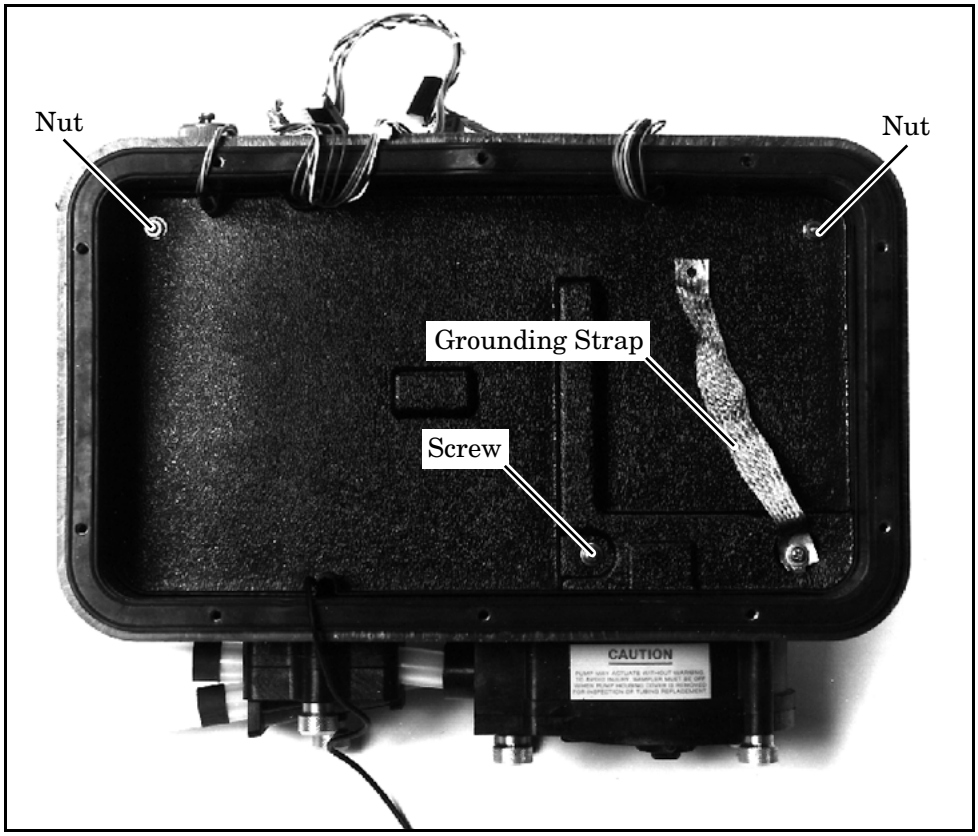

Precautions for Servicing CMOS Circuitry

Most of the circuitry in the sampler controller is made up of CMOS components. Because of the oxide gate structure of these devices, they are extremely susceptible to destruction from the discharge of static electricity through their inputs.

⚠ CAUTION

- ***Disconnect power from the refrigerator and controller when working on the unit.***
- ***Keep yourself grounded when handling disassembled equipment.***

Preliminary Electronics Troubleshooting Steps

Following are suggested areas to check before attempting to service the microprocessor CPU and associated circuitry. These checks should be made before looking at the CPU and memory.

1. Supply voltage is correct.
2. Wiring harnesses, connectors, and solder joints are in good condition.
3. Appearance of physical damage, such as burned or broken components, overly hot components, or evidence of water damage.
4. Shorted or open diodes and transistors, especially driver transistors.
5. Voltage regulators working properly.
6. Excessive current draw in the circuitry.
7. Correct input signals to unit.
8. Crystal oscillator operating at proper frequency.
9. Reset circuitry working properly.

Circuit Boards

The following is a general description of the 3710 controller's electronic circuitry. While reading this description, refer to the schematic diagrams and the pictorial views of the circuit boards in **Figures 30** through **33**.

The 3710 controller is a microprocessor-based device which executes a program stored in ROM. The program (software) is a series of instructions that tell the microprocessor what to do in order to accomplish the various functions which the sampler must perform. The software is discussed only as is necessary to describe the operation of the circuitry (hardware).

A 12 VDC connector on the side of the control box is used to connect to an external 12 V source. A 3.75 Amp PTC device provides circuit protection.

The 3710 controller contains two printed circuit boards: the main board and the pump control board. The display module (attached to the main circuit board) also contains a small circuit board. This module is purchased assembled and does not contain any user-serviceable parts. Unless it is being replaced, do not disturb the display module.

Main Board

Power is supplied to the circuitry through P4 – pin 1 is ground and pin 2 is 12 V. A 5 V switching regulator (IC U11) is used to obtain a 5 V rail from the 12 V supply. All of the ICs used in the 3710 controller get their operating power from the 5 V rail. IC U11 is also used as a low voltage detector – it constantly monitors the 12 V supply. IC U17, a voltage converter, provides a -5 V supply which is needed for some components.

IC U8 is the microprocessor, IC U5 is the ROM, and IC U7 is the RAM. These three ICs make up the "brains" of the 3710 controller. The microprocessor executes the program stored in ROM. While executing, information (program settings, sample data, etc.) is retrieved from and stored in RAM. A 4.608 MHz crystal oscillator (Y1) sets the microprocessor's execution speed.

The 3710 controller keeps track of time with a real time clock (IC U3). Both the RAM and IC U3 are battery-backed with a lithium battery (B1). IC U1 is a switch which selects between battery and system power.

Three devices allow the microprocessor to communicate with the outside world: the 2 line, 20 characters per line LCD, IC U9, and IC U18. The LCD allows for communication with the user and is connected through P3. IC U13, transistor Q2, thermistor R15, and other components provide the LCD with a temperature compensated driver voltage. By providing temperature compensation, the display quality is optimized over a wide temperature range. IC U9 and IC U18 are I/O devices which allow the microprocessor to: read the keypad, sound the beeper, count pump counts, and so on.

A 23 position keypad, connected at P5, is used to direct the microprocessor through the program. Many discrete components along with IC U9 are used to decode pressed keys. All user-originated instructions to the 3710 controller enter the system through the keypad.

The 3710 controller is supplied with a liquid detection system that gives it the ability to accurately deliver specified sample volumes.

The liquid detection system consists of a piezoelectric sensor and filtering circuitry. The sensor, mounted on the exterior of the control box, produces a signal proportional to an induced strain on the pump tubing. This signal is routed through P8 to IC U15 and its associated circuitry where it is massaged into a YES or NO indication of liquid presence. IC U15, containing a switched capacitor low pass filter and two Op Amps, is the main circuit component of the detection system.

An RS-232 serial communications port is connected to the system at P9. This port is used to output sampler status, program settings, and sampling results to a printer or an interrogator. IC U21, IC U19, and a handful of discrete components are used to transmit serial information, receive serial information, and sense the presence of the externally connected device.

Pump Control Board

The pump control board is an integral part of the pump assembly and serves two functions: control the pump motor and sense pump revolutions.

The pump motor control consists of a 2-pole double-throw relay (K201) and transistor switches (Q201, Q202 and Q203). The relay is used to change the pumping direction and will run the pump in the reverse direction when in the rest state. Each time the pump runs, the microprocessor sends the pumping direction signal through pin 1 of P7, waits for the relay to change state, then starts the pump by sending a high signal through pin 3 of P7. Waiting for the relay to change state before applying power prevents arcing at the relay contacts.

A key element of the pump revolution count sensor is the LED-phototransistor device (IC201). Whenever the pump is running, power is supplied to IC201. A rotating disk positioned between the LED and phototransistor periodically interrupts the transmitted signal. These interruptions create pulses which are sent back to the main board at pin 8 of P7 to be counted. The microprocessor uses these counts to determine the pumped volume.

Figure 30 Optical Counter PCB Component Layout

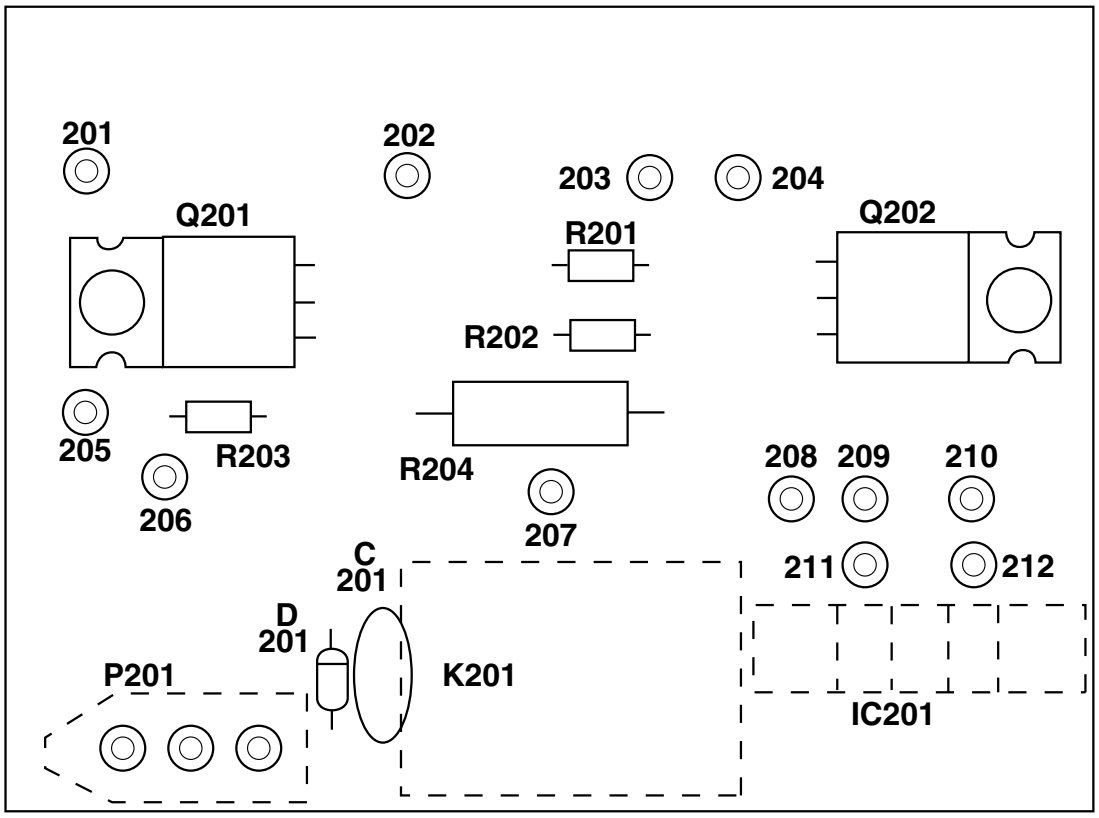

Figure 31 Main Circuit Board Schematic Diagram

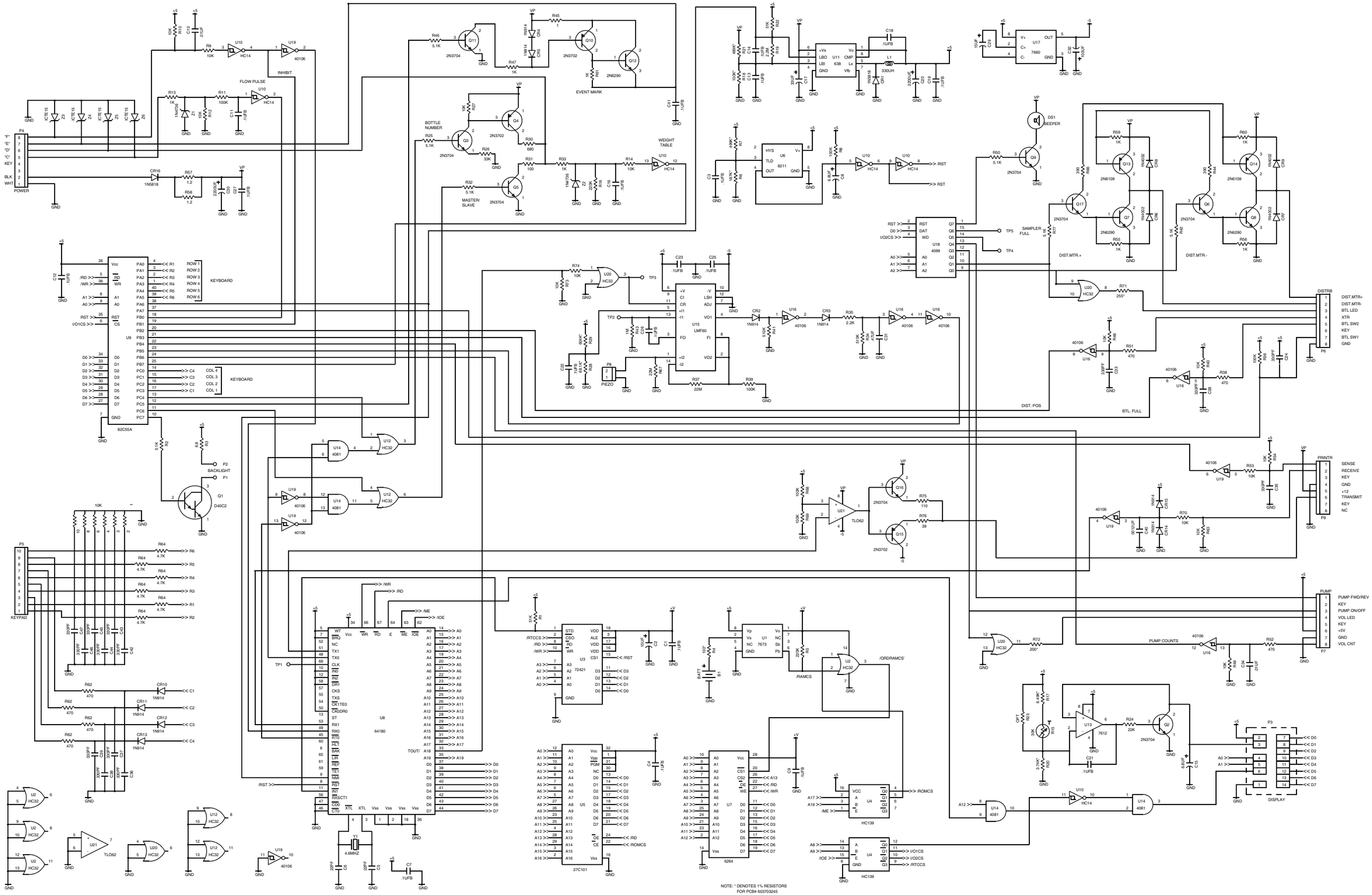

Figure 32 Main Circuit Board Component Layout

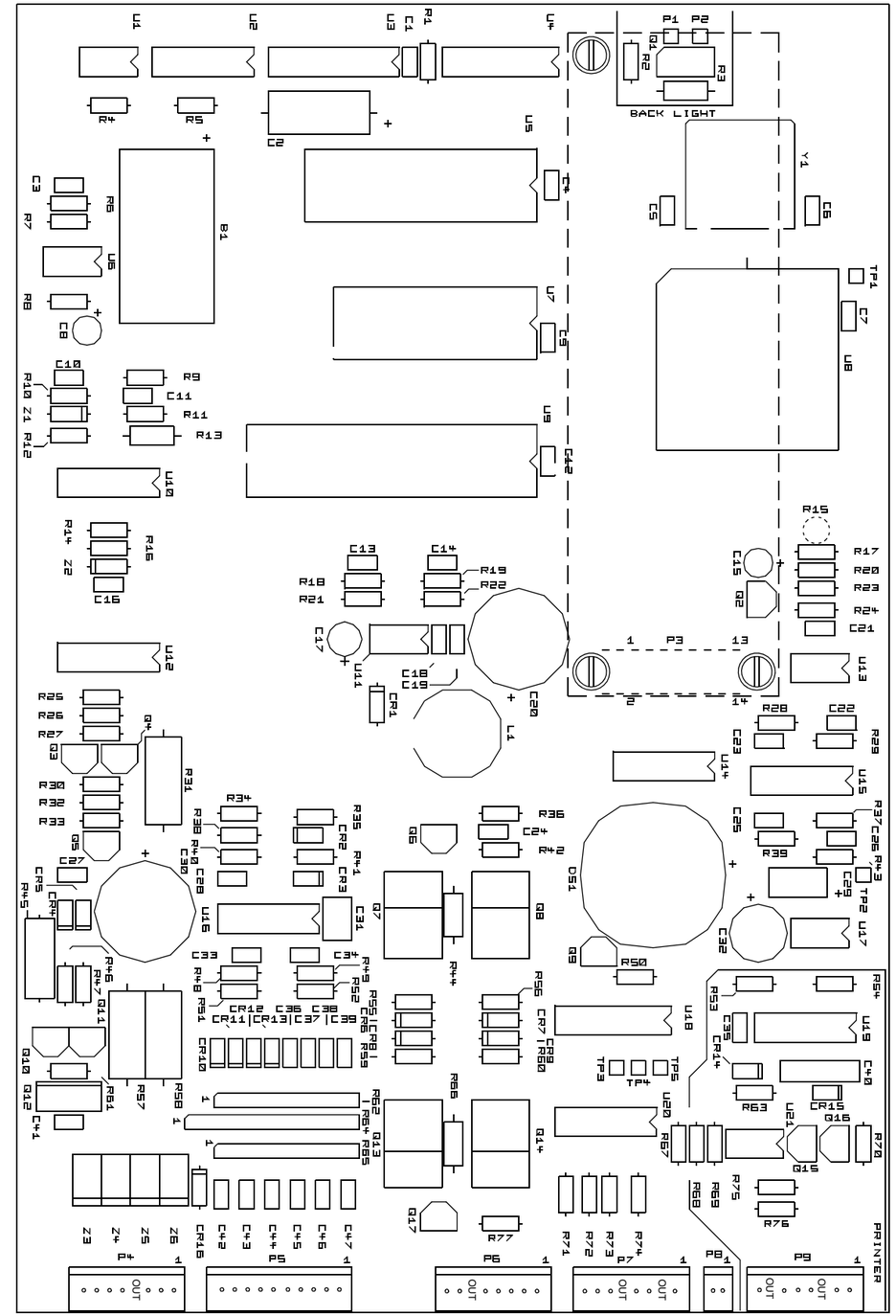

Figure 33 Case Schematic Diagram

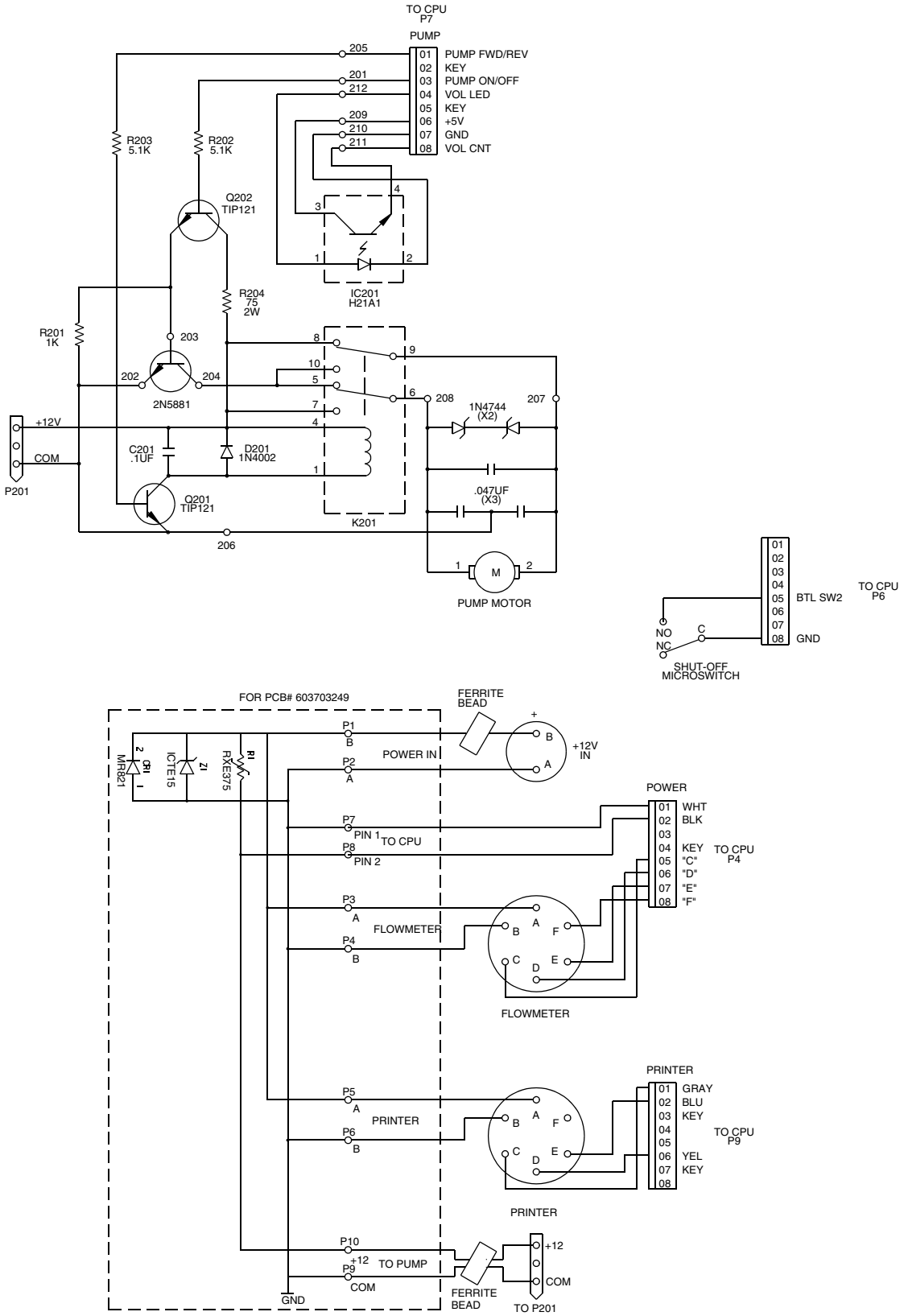

Sample Event Cycle and Delivery of Sample Volumes

The sequence of steps in a typical sample event is described below. Should you suspect a malfunction in the delivery of the sample volumes, this information will assist you in determining the point at which the problem occurs.

1. A sample event is initiated.
2. The pump rotates in the reverse direction to air purge the suction line inlet of any debris.
3. The pump direction changes, pumping in the forward direction to fill the suction line.
4. After the suction line has been filled to the pump inlet, the sample measuring portion of the sampling cycle begins. The pump continues to rotate in the forward direction until the programmed sample volume has been delivered.
5. The pump direction again changes, pumping in the reverse direction to air purge the suction line to avoid cross-contamination of samples. The pump then shuts off.
6. The sampler waits until another sample event is initiated and the cycle begins again at step 1.

Peristaltic Pump

The following is a brief description of the method by which the sample volume is determined. The sampler uses a peristaltic pump to transport the sample from the source to the sample bottle. When compared with other suction lift sample gathering methods, a peristaltic pump has numerous advantages: simplicity, reliability, no metering chamber required, easily cleaned, etc.

Volumetric Determination

The sampler determines the volumetric delivery of its peristaltic pump by electronically counting revolutions of the pump rotor. Each revolution of the pump rotor corresponds to a fixed number of "pump counts" and a certain volume of sample liquid. However, the volume of liquid delivered by one revolution of the pump rotor changes with the suction head and the type of suction line. At each sample event, the liquid detection system automatically compensates for changes in suction head and adjusts the volume delivered for each revolution of the pump. Thus, for a given type of suction line, each revolution of the pump rotor results in the delivery of a known amount of sample volume.

Sample Delivery

The sample pumping portion of a sample event consists of three parts: suction line fill, liquid detection, and sample volume delivery. The sampler counts the number of pump revolutions as the suction line fills. At liquid detection, the controller uses that count to determine the proper number of pump revolutions required to deliver the programmed sample volume. It is important to note that the volume delivered by a peristaltic pump can be influenced by a number of factors other than those discussed above. Thus, even with the sophistication of the sample volume measuring functions of the sampler, the volume of sample deposited in the sample bottle may vary from the programmed value. The repeatability of a sample volume from sample to sample (which normally is the most important consideration) will typically be within the ± 10 ml specification stated in **Table 1**, on page 6.

Replacement Parts List

An illustrated list of common replacement parts for the 3710R/3710VR/3750 follows in the replacement parts appendix. When ordering a replacement part, be sure to include the Isco part number, a complete description, and the serial number of the unit on which the part is to be used. The controller and the refrigerator are serialized separately. The controller serial number is located on the side of the unit and the refrigerator serial number is located on the inside of the door.

Accessory Parts List

A list of options and accessory parts described throughout this manual can be found in **Appendix B**. When ordering an option or accessory, be sure to include the part description and the Isco part number.

Appendix A Replacement Parts

REFRIGERATOR ASSEMBLY

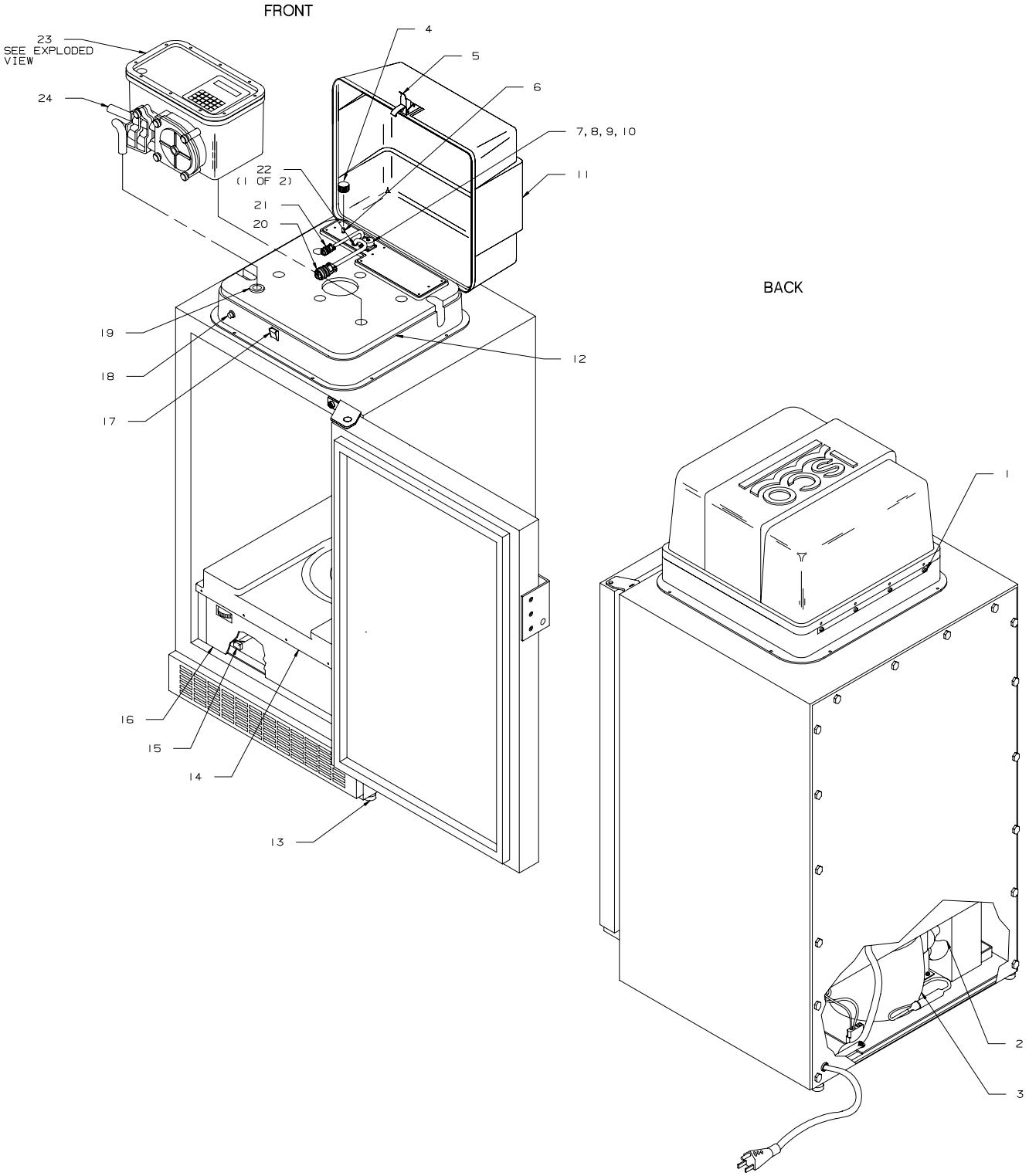

REFRIGERATOR ASSEMBLY

ITEM	INVENTORY NO.	DESCRIPTION
1	601623017	COVER HINGE
2	304230100	FAN ASSY - MARVEL 42180093
3	209019006	MARVEL REPL. COMP. - PANASONIC (FROM SN 06539-001)
	209019007	COMPRESSOR MARVEL 134 (STARTING SN 196E00101)
4	602934019	THERMOSTAT KNOB ASSY
5	109080000	OVER CENTER DRAW LATCH - SOUTHCO
6	431000500	THERMOSTAT MARVEL
7	140100600	AMP PANEL MT MS3102A-14S-6P
8	609003291	CONNECTOR CAP STRAP
9	603113032	CONNECTOR CAP GASKET MEDIUM
10	603113024	CONNECTOR PROTECTOR CAP MEDIUM
11	602923012	CONTROL COVER
12	602743062	CONTROL BASE
13	601163066	FOOT DELRIN 1-1/4 DIA X 3/4
14	602733011	BOTTLE LOCATING BASE
15	602754009	MICROSWITCH ASSY
16	602934017	FRONT PANEL ASSY
17	609003280	KEEPER LATCH
18	602734013	INDICATING LIGHT ASSY
19	602923038	TUBE FEED THRU
20	602934008	SHUTOFF CABLE ASSY
21	601624010	POWER CABLE ASSY
22	209007505	BSHG SR NYL .300 .500 .090
23	603714001	3710 SAMPLER CONTROLLER
24	603714018	PUMP TUBING ASSY 40-1/2" (FOR SINGLE BOTTLE SAMPLING)
25	602744035	3740 POWER PACK REPLACE KIT
26	602744032	REFRIG POWER PACK ASSY

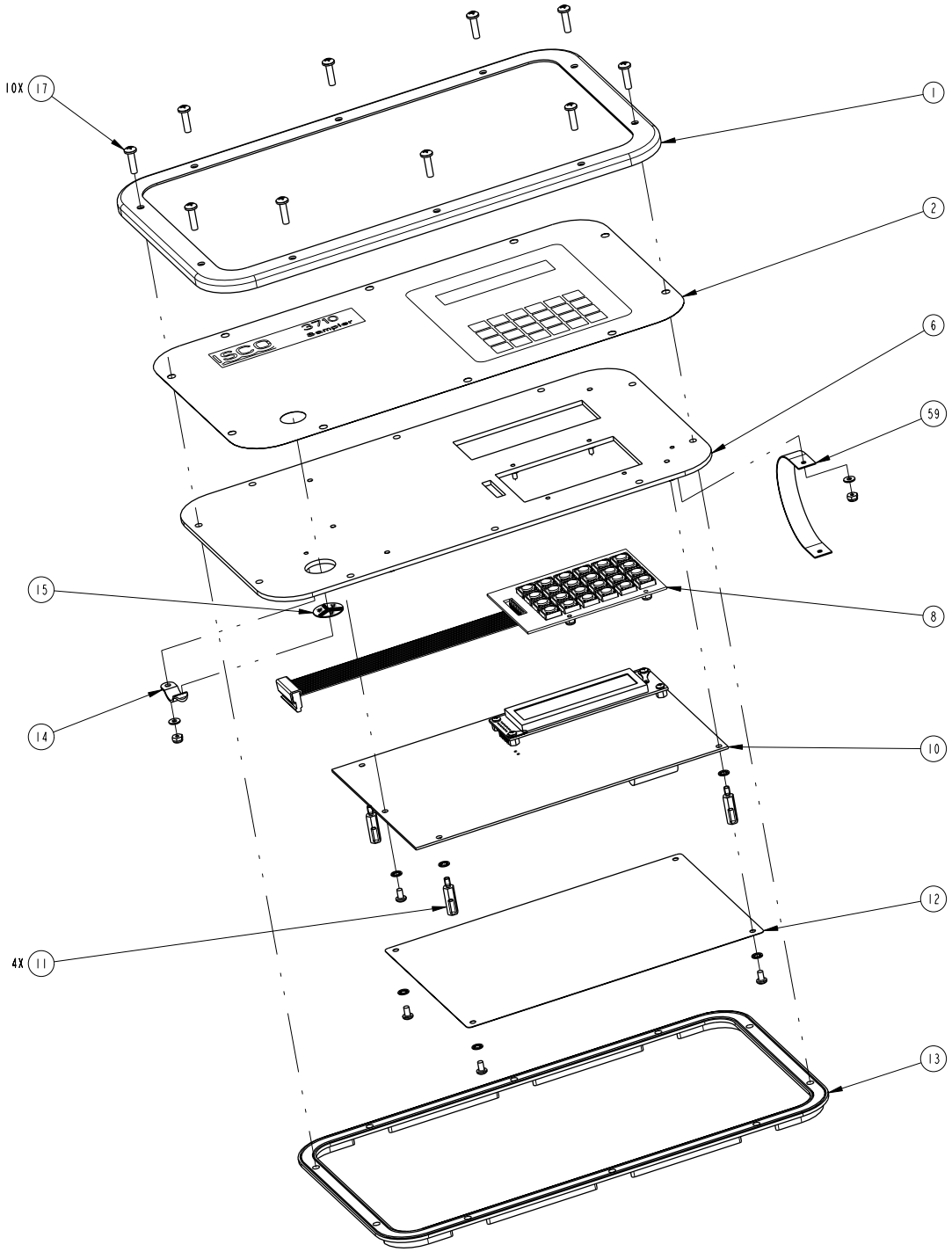

60-3713-076
REV-D

603713076

REPLACEMENT PARTS LIST

SHEET: 2 OF 6

Isco, Inc.

REV: D | DATE: 02015

ITEM NO.	PART NUMBER	DESCRIPTION
1	693703282	RING TRIM
2	603713004	LABEL CONTROL PANEL
6	603708003	CONTROL PANEL STUD ASSEMBLY
8	693704003	WIRING ASSEMBLY KEYPAD
10	603704189	CIRCUIT BOARD ASSEMBLY, 3710 CPU, CE
11	603703028	STANDOFF 1/4 HEX, SST 6-32M/F X .781
12	693703008	ELECTROSTATIC DISCHARGE SHIELD
13	602703010	CONTROL BOX GASKET
14	209902138	TENSION CLIP 3/8 DIA.
15	490001300	HUMIDITY INDICATOR CARD
17	231514510	SCREW CAP SST 8-32 X 5/8
59	603703256	STRAP INTERCONNECT 5.5"

NOTE: 1. For current prices and quotations on parts, contact Isco Service Department.
2. This list is subject to change without notice.

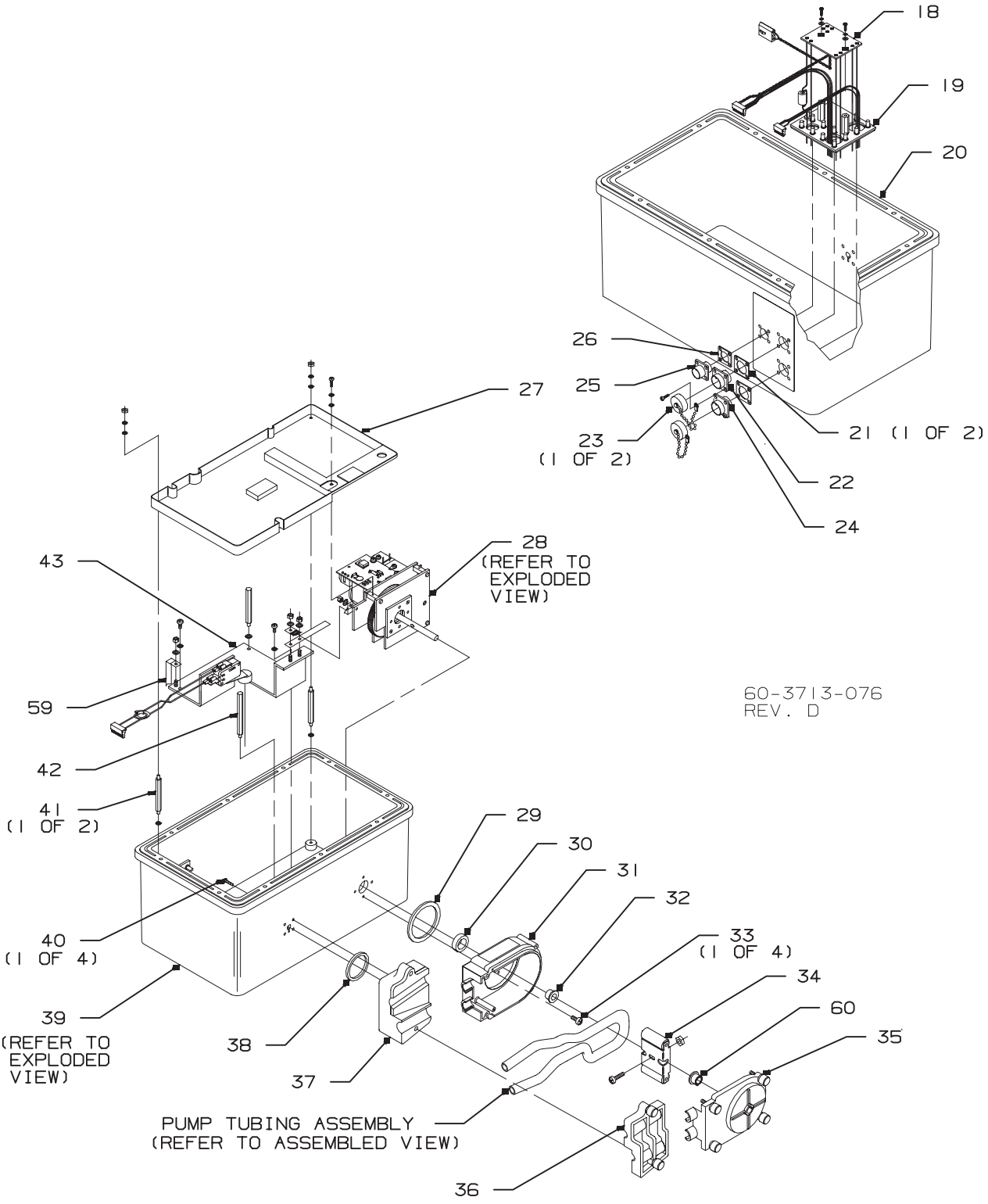
18
19
20
26
25
27
23
(1 OF 2)
21 (1 OF 2)
22
24
28
(REFER TO
EXPLODED
VIEW)
43
59
42
41
(1 OF 2)
60-3713-076
REV. D
29
30
31
32
33
(1 OF 4)
34
60
35
40
(1 OF 4)
39
(REFER TO
EXPLODED
VIEW)
38
37
PUMP TUBING ASSEMBLY
(REFER TO ASSEMBLED VIEW)
36

DRAWING NO: 60-3713-076
REVISION: D
SHEET 4 OF 6
EFFECTIVE DATE: 02015

REPLACEMENT PARTS LIST

ITEM NUMBER	PART NUMBER	DESCRIPTION
18	60-3704-151	CIRCUIT BOARD ASSEMBLY, POWER SUPPLY CONNECTIONS
19	60-3704-156	BACK PLATE ASSEMBLY WITH GASKET, CE
20	60-3714-026	CONTROL BOX MODIFICATION ASSEMBLY
21	60-1473-057	SEAL GASKET, 6 PIN AMP
22	140-1006-00	PLUG, PANEL MOUNT, 6 PIN
23	149-1001-00	DUST COVER #14
24	60-3704-091	PRINTER CONNECTOR ASSEMBLY
25	140-1002-01	PLUG, PANEL MOUNT, 2 PIN
26	60-1393-082	SEAL GASKET, 2 PIN AMP
27	60-3703-252	DESICCANT TRAY, CE
28	60-3704-154	PUMP GEAR CASE ASSEMBLY, CE
29	202-1001-35	O RING 1.925 ID, .103 CROSS SECTION BUNA-N
30	202-9999-03	LIP SEAL, .375 ID X .750 OD
31	60-3704-019	PUMP HOUSING ASSEMBLY, INSIDE
32	60-3703-012	PUMP HOUSING BUSHING
33	231-9145-12	SCREW, MACHINE, 8-32 X ¾ SELF SEAL, SST
34	60-2704-019	PUMP ROTOR ASSEMBLY
35	60-3704-017	PUMP HOUSING ASSEMBLY, OUTSIDE (INCLUDES ITEM 60)
36	60-3704-021	DETECTOR LID ASSEMBLY
37	60-3704-022	DETECTOR BASE ASSEMBLY
38	202-4012-37	O RING, 1.237 ID, .103 CROSS SECTION, SILICONE
39	60-3714-047	CONTROL BOX SUB ASSEMBLY, CE
40	231-0195-08	SCREW, MACHINE, 8-32 X ½ SELF SEAL, SST
41	60-2703-170	STANDOFF, 6-32 X .25 HEX X 3.00 LONG, MALE, SST
42	60-3714-017	SHORT STANDOFF ASSEMBLY
43	60-3714-045	SHUTOFF MICROSWITCH ASSEMBLY, CE
59	60-3703-256	INTERCONNECT STRAP, 2.25”
60	60-3703-278	PUMP HOUSING BUSHING

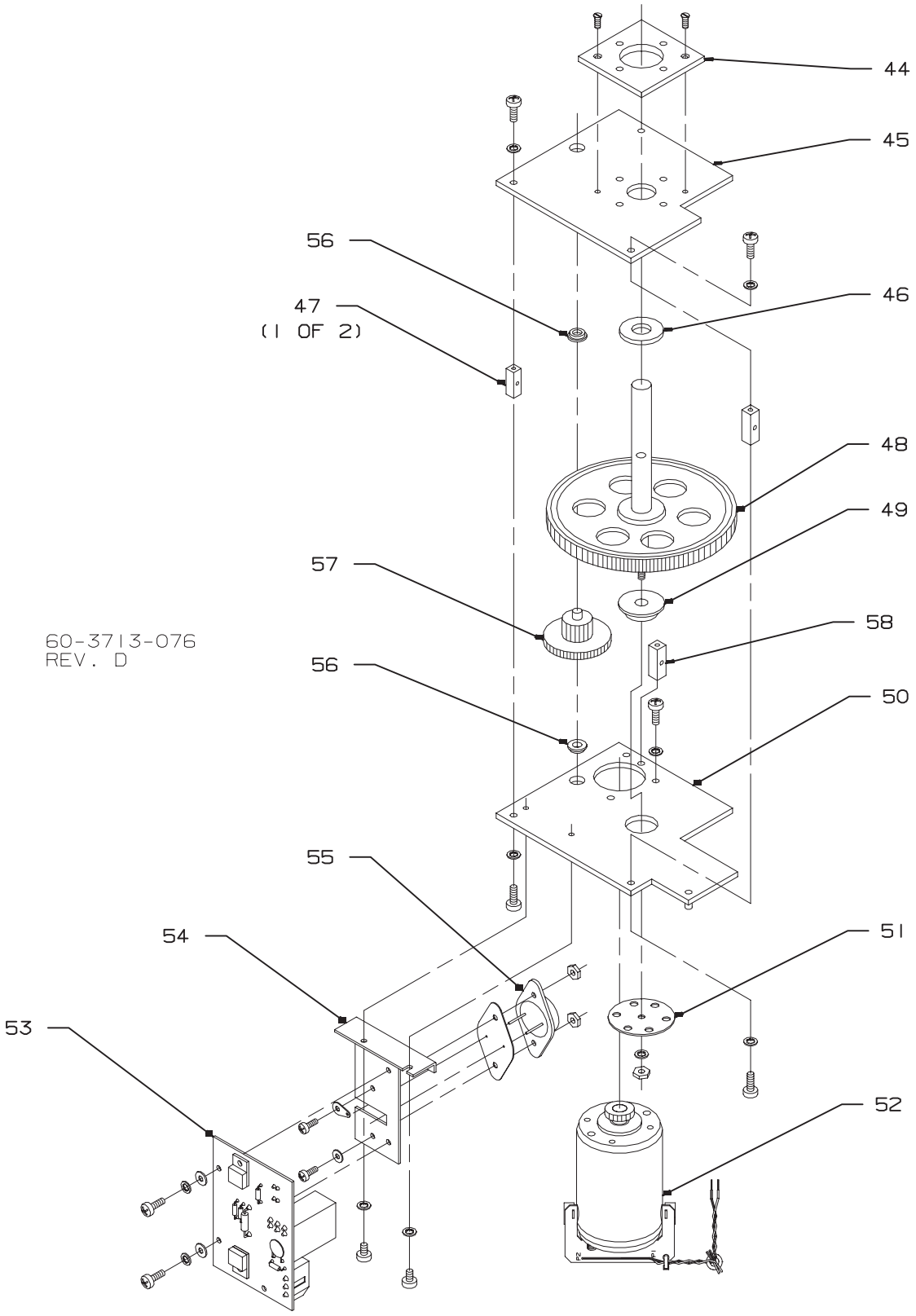
44
45
56
47
(1 OF 2)
46
48
49
57
58
60-3713-076
REV. D
56
50
55
54
51
53
52

DRAWING NO: 60-3713-076
REVISION: D
SHEET 6 OF 6
EFFECTIVE DATE: 02015

REPLACEMENT PARTS LIST

ITEM NUMBER	PART NUMBER	DESCRIPTION
44	60-2703-037	PUMP SHAFT SPACER PLATE
45	60-2703-050	PUMP PLATE
46	60-2703-058	SPACER, .380 ID X 1.00 OD X .060 LONG, DELRIN
47	60-2703-096	STANDOFF, 6-32 X .25 SQUARE X .75 LONG, MALE, SST
48	60-2704-010	PUMP SHAFT ASSEMBLY
49	60-2703-076	FLANGED BEARING, .275 ID X .625 OD X .31 LONG
50	60-3704-160	MOTOR PLATE ASSEMBLY, CE
51	60-2703-063	PUMP SHAFT OPTICAL DISK
52	60-3704-172	PUMP MOTOR W/FILTER ASSEMBLY
53	60-2704-039	CIRCUIT BOARD ASSEMBLY, COUNTER
54	60-2704-048	MOUNTING PLATE ASSEMBLY, OPTICAL COUNTER
55	402-0258-01	TRANSISTOR, 2N5881/2N5882
56	201-3112-00	FLANGED BEARING, .189 ID X .314 OD X 1/8 LONG
57	60-2704-008	PUMP GEAR SHAFT ASSEMBLY
58	237-1150-00	STANDOFF, 6-32 X 3/16 ROUND X ¾ LONG, FEMALE, ALUMINUM

SINGLE BOTTLE
SAMPLING

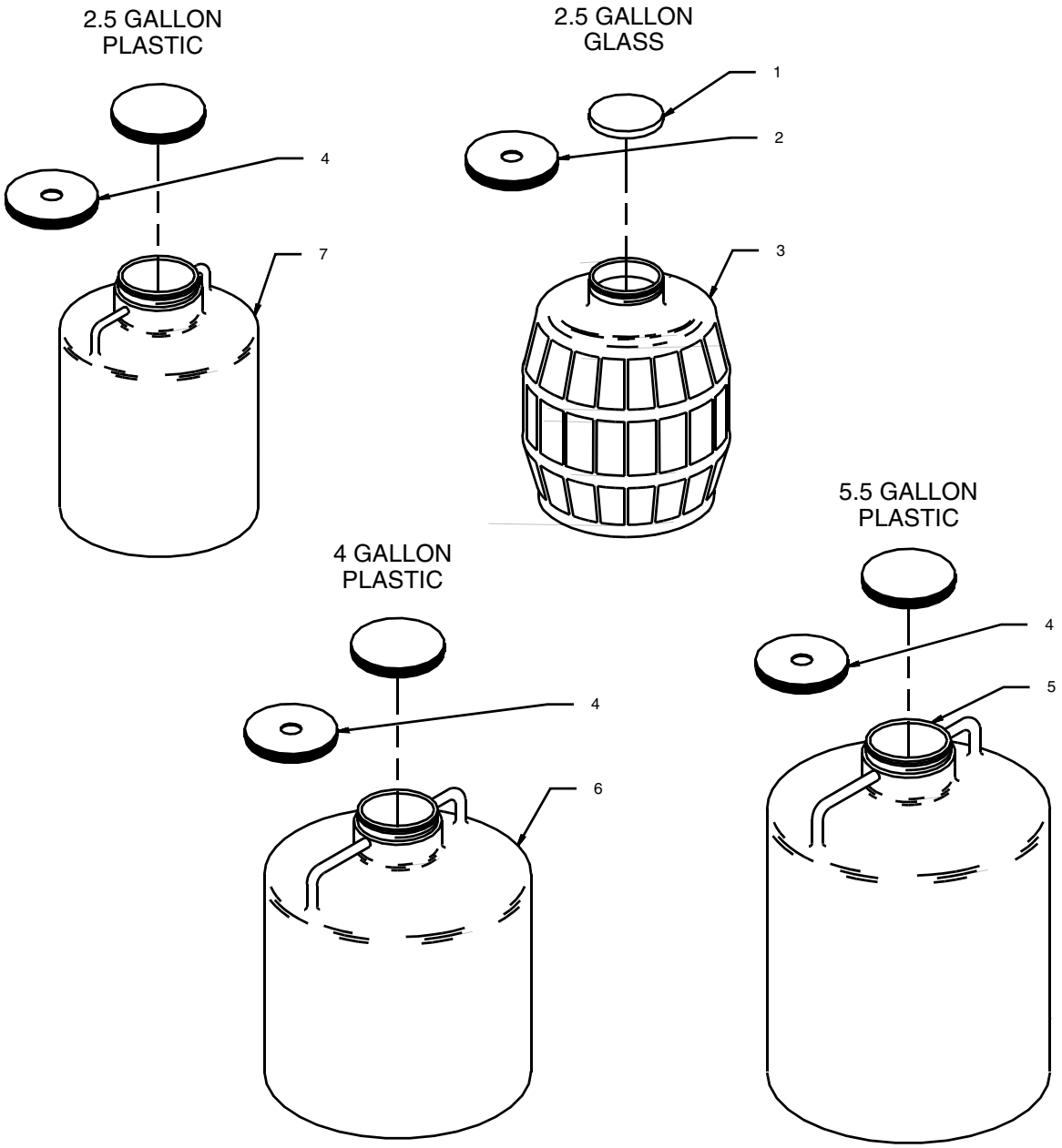

ITEM	INVENTORY NO.	DESCRIPTION
1	603004193	LID & LINER ASSY
2	603004184	LID & LINER MOD ASSY 120MM
3	291000000	BTL GLS 2-1/2 GAL W/CAP BALE
4	601623027	LID MOD, PLS BTLS
5	299001306	BTL NALGENE 5-1/2 GAL W/CAP
6	299001305	BTL NALGENE 4 GAL W/CAP
7	299001304	BTL NALGENE 2-1/2 GAL W/CAP

60-3713-069

Appendix B Accessories List

General Accessories

2.5 gallon polyethylene container with cap 299-0013-04
2.5 gallon glass container with cap and Teflon liner 68-2700-005
4 gallon polyethylene container with cap 299-0013-05
Extra Silastic pump tubing, 40.5" length 60-3714-018
Model 3710 Sampler controller with pump tubing 68-3750-005
Extra Pocket Guide, Model 3710R/3710VR/3710FR. 60-3713-049
Extra Silastic pump tubing, bulk 15' length 68-1680-061
Extra Silastic pump tubing, bulk 50' length 68-1680-065
Plastic graduated cylinder, 1000 ml, for sample volume calibration. 299-0020-00

Suction Lines and Strainers

1/4" ID x 10' vinyl suction line with weighted polypropylene bodied strainer 60-3704-067
1/4" ID x 25' vinyl suction line with weighted polypropylene bodied strainer 60-3704-068
3/8" ID x 10' vinyl suction line with weighted polypropylene bodied strainer 60-3704-071
3/8" ID x 25' vinyl suction line with weighted polypropylene bodied strainer 60-3704-072
3/8" ID x 10' Teflon suction line with protective coating, without strainer 60-1683-146
3/8" ID x 25' Teflon suction line with protective coating, without strainer 60-2703-114
Weighted strainer only, 1/4", polypropylene body. 60-1394-070
Low flow strainer only, 1/4", all stainless steel. 60-2903-081
Weighted strainer only, 3/8", all stainless steel 60-1684-110
Weighted strainer only, 3/8", polypropylene body. 60-1394-071
Low flow strainer only, 3/8", all stainless steel (not recommended for use with Teflon suction line) 60-2903-079
Weighted strainer only, 3/8", all plastic 60-3704-066
1/4" ID vinyl tubing, bulk 100'. 68-1680-055
1/4" ID vinyl tubing, bulk 500'. 68-1680-056
1/4" ID vinyl tubing, bulk 1000'. 68-1680-057
3/8" ID vinyl tubing, bulk 100'. 68-1680-058
3/8" ID vinyl tubing, bulk 500'. 68-1680-059
1/4" Vinyl suction line accessory kit (required for 1/4" suction lines). 68-3700-006
3/8" Vinyl suction line accessory kit (required for 3/8" suction line). 68-3700-007

Power Sources

Model 913 High Capacity Power Pack (120-volt) 60-1684-088
Model 914 Battery-Backed Power Pack (120-volt) 60-3004-130
Model 923 High Capacity Power Pack (240-volt) 60-1684-093
Model 924 Battery-Backed Power Pack (240-volt) 60-3004-160
Model 934 Nickel-Cadmium Battery. 60-1684-040
Model 946 Lead-Acid Battery 60-3004-106
Model 948 45-Amp-Hour Battery 68-3000-948
Portable 12-volt DC, 6-Amp Battery Charger for 948 Battery 341-0118-12
Model 961 Battery Charger (120-volt). 60-3004-059
Model 965 Five Station Battery Charger 68-3000-965

Model 954 Solar Panel Battery Charger 68-3000-027
Additional Solar Panel 68-3000-028
Solar Panel Cable (25-foot Length) 60-3004-097
Solar Panel "Y" Cable 60-3004-098
Solar Panel/Interrogator. Extension Cable 60-2544-028
Connect cable, for external 12 VDC power source; terminates in heavy duty battery clips 60-1394-023

INTERFACING EQUIPMENT

Model 1640 Liquid Level Actuator 60-1644-000
Extra Instruction Manual, Model 1640 60-1644-009
Connect Cable, 25' Isco Sampler to Isco Flow Meter 60-3004-107
Connector only, without cable, for use with non-Isco flow meters having an
isolated contact closure proportional to flow 68-1680-060
Same as above, with 22' cable terminating in two wires 60-1394-077
Type A Interface (converts pulse duration flow meter output proportional to
flow into pulses acceptable to Isco samplers) 60-1784-007
4-20 mA Sampler Input Interface (converts analog signal flow meter output
as specified by user into pulses acceptable to Isco samplers) 60-3704-037
Isco Field Printer 60-3774-001
FLOWLINK 3® Software with Manual 60-2544-043
SAMPLINK Sampler Interrogation Software with Manual 60-3774-013
Interrogator communications line kit - 9 pin (connects laptop computer with
9 pin serial port to sampler) 60-2544-044
Interrogator communications line kit - 25 pin (connects laptop computer with
25 pin serial port to sampler) 60-2544-040

Appendix C Display Index

Note: To access the display number, press the STOP key while the sampler displays the screen in question. The display numbers are available in the Standby and Program states.

Disp. No.	Display	Description
1	[PROGRAM, CONFIGURE] SAMPLER	This display appears after you press the ENTER/PROGRAM key while in standby. Select "PROGRAM" to access the program sequence. Select "CONFIGURE" to access the configure sequence.
3	----- COUNTS FORWARD	This informational display appears when you stop the pump with the STOP key after having pressed the PUMP FORWARD key. It reports the number of pump counts detected while the pump was in operation. Exit this display by pressing any key except STOP and ON/OFF.
3	----- COUNTS REVERSE	This informational display appears when you stop the pump with the STOP key after having pressed the PUMP REVERSE key. It reports the number of pump counts detected while the pump was in operation. Exit this display by pressing any key except STOP and ON/OFF.
10	[TIME, FLOW] PACED SAMPLING	This display appears after you select "PROGRAM" in Display #1. Select "TIME" for time-paced sampling, "FLOW" for flow-paced sampling.
11	[UNIFORM, NONUNIFORM] TIME INTERVALS	This display appears only in the extended programming mode and follows Display #10 when you have selected "TIME." Select "UNIFORM" for uniform time intervals, "NONUNIFORM" for nonuniform time intervals.
20	MODIFY SEQUENCE? [YES, NO]	This display follows Display #11 when you have selected "NONUNIFORM." Select "YES" to modify the existing nonuniform intervals. Select "NO" to leave the nonuniform intervals unchanged.
21	SAMPLE EVERY -- HOURS -- MINUTES	In the basic programming mode, this display appears after you have selected "TIME" in Display #10. In the extended programming mode, this display appears when you have selected "UNIFORM" in Display #11. Enter the uniform time interval. Two entries are required: the first entry sets the hours, the second sets the minutes.
22	SAMPLE EVERY ---- PULSES (1 - 9999)	This display follows Display #10 when you have selected "FLOW." Enter the flow pulse interval.
25	TAKE --- SAMPLES (1 - *MAX*)	This display follows Display #20 when you have selected "YES" to modify the nonuniform time interval sequence. Enter the number of sample events to occur at nonuniform time intervals. *MAX* varies according to the bottle size entered in Display #223.
26	TAKE SAMPLES AT 1. *HH:MM* *DD-MMM*	This display follows Display #25. Enter the nonuniform clock times and dates for each sample event.
27	QUANTITY AT INTERVAL 1. -- AT --- MINUTES	Enter the number of samples to be taken at each interval. The total quantity entered will be one less than the total number of samples because the first sample, taken at the start time, counts as one. For example, if 19 samples are to be taken (the first 6 at 20 minute intervals, the next 9 at 30 minute intervals, and the remaining 3 at 45 minute intervals); first enter a quantity of 6 at 20 minutes, a quantity of 9 at 30 minutes, and then 3 at 45 minutes. **Figure 34** shows a time line for the sampling routine.

Figure 34 Time Line

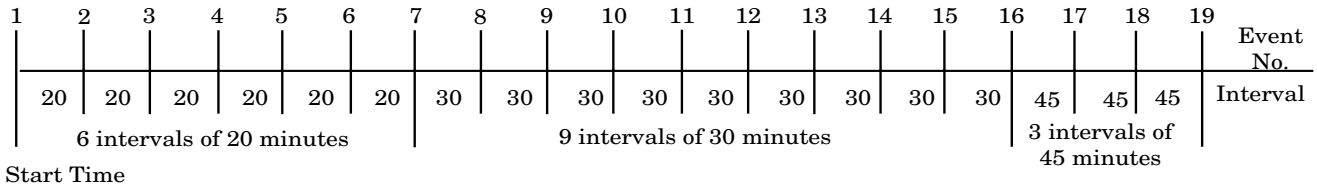

Disp. No.	Display	Description
50	**SAMPLE VOLUMES OF --- ml EACH (10- MAX)**	Enter the size of the sample volume. *MAX* will vary according to the number of samples per bottle and bottle size.
60	**--- COMPOSITE SAMPLES (0 - *MAX*)**	Enter the number of composite samples. An entry of "0" will instruct the sampler to take samples until the weight table terminates the sampling routine.
70	**SUCTION HEAD OF -- FEET (1 - *MAX*)**	This display appears when you have selected "YES" in Display #242 or have selected "DISABLE" in Display #240. Enter the measured suction head. *MAX* will be the smaller of the suction line length or "20."
80	**CALIBRATE SAMPLE VOLUME? [YES, NO]**	This display appears in the program sequence when you have selected "ENABLE" in Display #290. Select "YES" to use the calibration sequence, "NO" to omit the calibration sequence.
81	**PRESS MANUAL SAMPLE KEY WHEN READY . . .**	This display is part of the calibration sequence. Press the MANUAL SAMPLE key when a collection bottle is underneath the pump tube.
82	**--- ml VOLUME DELIVERED**	This display is part of the calibration sequence. When it first appears, it reports the programmed sample volume. If the measured volume differs from the reported volume, enter the measured volume here.
83	**---ml! ARE YOU SURE? [YES, NO]**	This display is part of the calibration sequence and appears if the measured volume and the programmed volume differ by a factor of two or more. Select "YES" to confirm the number entered in Display #82. Select "NO" to return to Display #82.
90	**ENTER START TIME? [YES, NO]**	Select "YES" to enter a start time. Select "NO" to begin the sampling routine according to the delay set in Display #310.
91	**TAKE FIRST SAMPLE AT HH:MM DD-MMM**	This display appears for time-paced routines when you have selected "YES" in Display #90. Enter the start time and date for the first sample event. This display will also appear if you have initiated the routine after a programmed start time so that you can reprogram the start time.
92	**START FLOW COUNT AT *HH:MM DD-MMM***	This display appears for flow-paced routines when you have selected "YES" in Display #90. Enter the start time and date for the flow pulse countdown. This display will also appear if you have initiated the routine after a programmed start time so that you can reprogram the start time.
100	**-- STOP or RESUME TIMES (0 - 24)**	This display appears when you have selected "ENABLE" in Display #300. Enter the number of stop and resume times.

Disp. No.	Display	Description
101	**STOP SAMPLING AT 1.*HH:MMDD-MMM***	This display appears when the setting in Display #100 is greater than zero. Enter the appropriate stop time.
102	**RESUME SAMPLING AT 1.*HH:MMDD-MMM***	This display appears when the setting in Display #100 is greater than one. It follows Display #101. Enter the appropriate resume time.
140	**[START, RESUME] SAMPLING PROGRAM**	This display appears when a routine is halted and you press the START SAMPLING key. Select "START" to start the sampling program at the beginning, "RESUME" to continue the sampling program at the point at which it was halted.
142	**CHANGE START TIME? [YES, NO]**	This display appears when you have started a routine after the programmed start time. Select "YES" to enter a new start time. Select "NO" to start the routine immediately; some sample events may be missed or late.
148	**[REVIEW, PRINT] PROGRAM INFORMATION**	This display appears after you press the DISPLAY STATUS key. Select "REVIEW" to view the summary of the current program settings and for sampling results. Select "PRINT" to send the current status, program settings, and sampling results to an Isco Field printer. The printed results include data for sample events completed at the time you pressed the DISPLAY STATUS key.
149	**PRINT PROGRAM [NO, SETTINGS, RESULTS]**	This display appears after you select "Print" in Display #148. Select "NO" to return to standby. Select "Settings" to print the settings report. Select "RESULTS" to print the results report.
150	**REVIEW PROGRAM [NO, SETTINGS, RESULTS]**	This display appears after you select "REVIEW" in display #148. Select "NO" to return to the previous operating state. Select "SETTINGS" to view the summary of the current program settings. Select "RESULTS" to view the sampling results for sample events completed at the time you pressed the DISPLAY STATUS key.
151	***SETTINGS DISPLAYS***	Display #151 is used to identify the displays used to summarize the current program settings which appear when you select "SETTINGS" in Display #150.
152	***RESULTS DISPLAYS***	Display #152 is used to identify sampling results displays which appear when you select "RESULTS" in Display #150.
200	**SELECT OPTION (← →)** *NAME OF CONFIGURE OPTION*	Display #200 is used to identify the displays which locate each configure option in the configure sequence. Press ENTER/PROGRAM to access the input displays for each option. Use the LEFT ARROW and the RIGHT ARROW keys to move through the options.
210	**HH:MM DD/MM/YY** ***HH:MM DD/MM/YY***	Set Clock configure option. Enter the time and date to set the controller's clock. Use military time. Enter two digits each for the day (DD), month (MM), and year (YY).
220	**[PORTABLE, REFRIG.] SAMPLER**	Bottle Size configure option. Select "PORTABLE" when you are using a 3710 Portable Sampler. Select "REFRIG." when you are using a 3710 refrigerated sampler.
223	**BOTTLE VOLUME IS ----- ml**	Bottle Size configure option. Enter the bottle volume in milliliters.

Disp. No.	Display	Description
224	---- ml . . . ARE YOU SURE? [YES, NO]	Bottle Size configure option. This display appears when you have entered a bottle volume, in Display #223, that exceeds a standard Isco bottle size.
230	SUCTION LINE ID IS [1/4, 3/8] INCH	Suction Line configure option. Select "1/4" if you are using 1/4 inch suction line, "3/8" if you are using 3/8 inch suction line.
231	SUCTION LINE IS [VINYL, TEFLON]	Suction Line configure option. This display appears when you have selected "3/8" in Display #230. Select "VINYL" if you are using vinyl suction line, "TEFLON" if you are using Teflon suction line.
232	SUCTION LINE LENGTH IS -- FEET (3 - 99)	Suction Line configure option. Enter the length of the suction line. The length should not include the tube coupling or the strainer.
240	[ENABLE, DISABLE] LIQUID DETECTOR	Liquid Detector configure option. Select "ENABLE" to turn the Liquid Detector on, "DISABLE" to turn the Liquid Detector off. If you turn the detector off, you will be required to enter the suction head (Display #70) in the program sequence.
241	- RINSE CYCLES (0 - 3)	Liquid Detector configure option. This display appears when you have selected "ENABLE" in Display #240. Enter the number of rinse cycles. Rinse cycles condition the suction line to reduce cross contamination.
242	ENTER HEAD MANUALLY? [YES, NO]	Liquid Detector configure option. This display appears when you have selected "ENABLE" in Display #240. Select "YES" to add the suction head setting (Display #70) to the program sequence. Select "NO" to omit the suction head setting.
243	RETRY UP TO - TIMES WHEN SAMPLING (0 - 3)	Liquid Detector configure option. This display appears when you have selected "ENABLE" in Display #240. Enter the number of retries: the number of times the sampler will try to detect the presence of liquid for each sample event.
250	[BASIC, EXTENDED] PROGRAMMING MODE	Programming Mode configure option. Select "BASIC" if you want to use the basic programming mode. Select "EXTENDED" if you want to use the extended programming mode.
255	LOAD PROGRAM [#1, #2, #3, NONE]	Load Stored Program configure option. Select the sampling program you want to use. Select "NONE" to exit the display without loading a program.
260	SAVE PROGRAM AS [#1, #2, #3, NONE]	Save Current Program configure option. Select the number you want to use to identify the current program with when saved. Select "NONE" to exit the display without saving a program.
270	TAKE SAMPLE AT START TIME? [YES, NO]	Flow Mode Sampling configure option. This setting affects flow-paced sampling routines. Select "YES" to take the first sample at the start time, "NO" to take the first sample at the end of the first flow pulse interval.
280	ENTER INTERVALS IN [CLOCK TIME, MINUTES]	Nonuniform Time configure option. Select "CLOCK TIME" to enter the nonuniform time intervals as clock times (Display #26). Select "MINUTES" to set the nonuniform intervals in minutes (Display #27).

Disp. No.	Display	Description
290	[ENABLE, DISABLE] CALIBRATE SAMPLER	Calibrate Sampler configure option. Select “ENABLE” to add calibration displays to the program sequence. Select “DISABLE” to omit the calibration displays.
300	[ENABLE, DISABLE] SAMPLING STOP/RESUME	Sampling Stop/Resume configure option. Select “ENABLE” to add the Sampling Stop and Resume settings to the program sequence. Select “DISABLE” to omit the settings.
301	SAMPLE AT STOP? [YES, NO]	Sampling Stop/Resume configure option. This display appears when you have selected “ENABLE” in Display #300. Select “YES” to take a sample at stop times. Select “NO” if no sample event is desired at the stop times.
302	SAMPLE AT RESUME? [YES, NO]	Sampling Stop/Resume configure option. This display appears when you have selected “ENABLE” in Display #300. Select “YES” to take a sample at the resume times. Select “NO” if no sample event is desired at the resume times.
310	---- MINUTE DELAY TO START (0 - 9999)	Start Time Delay configure option. Enter the amount of time, in minutes, you want to delay the start time. This entry affects programs that do not have a programmed start time.
321	SAMPLE UPON DISABLE? [YES, NO]	Enable Pin configure option. Select “YES” to take a sample at the time the sampler becomes disabled. Select “NO” if no sample event is desired when the sampler becomes disabled.
322	SAMPLE UPON ENABLE? [YES, NO]	Enable Pin configure option. Select “YES” to take a sample at the time the sampler becomes enabled; i.e., ceases to receive an inhibit signal from a Flow Meter or a Liquid Level Actuator. Note: No sample will be taken if the enable signal is used to initiate the start time delay countdown. Select “NO” if no sample event is desired when the sampler becomes enabled.
323	RESET SAMPLE INTERVAL? [YES, NO]	Enable Pin configure option. Select “YES” to restart the sample interval countdown at the time the sampler becomes enabled. If “NO” is selected, the interval countdown is determined by the setting in Display #324.
324	INHIBIT COUNTDOWN? [YES, NO]	Enable Pin configure option. This display appears when “NO” was selected in Display #323. Select “YES” to freeze the sample interval when the sampler becomes disabled. The interval countdown will continue from the point at which it was stopped when the sampler is enabled. Select “NO” to allow the sample interval countdown to continue while the sampler is disabled.
330	[CONTINUOUS SIGNAL, PULSE]	Event Mark configure option. Select “CONTINUOUS SIGNAL” to send a variable duration event mark signal out pin E of the flow meter connector. Select “PULSE” to send a 3 second event mark signal.
331	DURING [PUMP CYCLE, FWD PUMPING ONLY]	Event Mark configure option. This setting appears when you have selected “CONTINUOUS SIGNAL” in Display #330. Select “PUMP CYCLE” to transmit the event mark signal during the entire pump cycle, including any programmed rinses and retries. Select “FWD PUMPING ONLY” to send the signal when the pump is delivering a sample volume only.

Disp. No.	Display	Description
332	AT THE BEGINNING OF [PURGE, FWD PUMPING]	Event Mark configure option. This setting appears when you have selected "PULSE" in Display #330. Select "PURGE" to transmit an event mark signal to a flow meter at the beginning of the pre-sample purge. Select "FWD PUMPING" to transmit a signal when the pump switches forward to deliver the sample volume.
340	--- PRE-SAMPLE COUNTS (0 - 9999)	Purge Counts configure option. Enter the number of pre-sample pump counts needed to purge the suction line. This value is set to 150 when the controller is re-initialized.
341	--- POST-SAMPLE COUNTS (0 - 9999)	Purge Counts configure option. Enter the number of post-sample pump counts needed to purge the suction line. The number that initially appears in this display is derived by the controller from the suction line ID and length entered in Display #'s 230 and 232.
350	------ PUMP COUNTS, WARNING AT ------	Tubing Life configure option. This informational display is used to communicate the number of pump counts elapsed since the last reset and the number of counts required to trigger the Pump Tubing Warning. Exit this display by pressing any key.
351	RESET PUMP COUNTER? [YES, NO]	Tubing Life configure option. After changing the pump tube, select "YES" to reset the pump counter to zero. Select "NO" to leave the counter unchanged.
352	------ PUMP COUNTS TO WARNING	Tubing Life configure option. Enter the number of pump counts required to trigger the pump count warning if the factory setting is not suitable. This value is set to 500,000 when the controller is re-initialized.
360	[ENABLE, DISABLE] PROGRAM LOCK	Program Lock configure option. Select "ENABLE" to turn the program lock on. If you enable the program lock, input displays are protected by a pass-number: 3710. The controller will not allow you to make any changes to a program or configure sequence setting until you enter the pass-number when requested. Select "DISABLE" to turn the program lock off.
365	SAMPLER ID NUMBER IS ----------	Sampler ID configure option. Enter the sampler ID (identification) here. The sampler will accept up to ten characters, including periods (press RESUME SAMPLING), dashes (press MANUAL SAMPLE), and spaces (press START SAMPLING).
371	RE-INITIALIZE? [YES, NO]	Run Diagnostics configure option. Select "YES" to re-initialize the controller: the entire RAM – with the exception of the configure option settings for current pump count total, bottle size, suction line and sampler ID – will be re-initialized to factory settings. Select "NO" the leave the settings unchanged.

Appendix D Calculating Flow Increment Between Samples

Calculating Flow Increment Between Samples

The sampler will accept flow proportional inputs of a certain specific nature from an external flow meter. These electronic flow input signals are transmitted to the sampler at fixed increments of total flow, for example, every 10,000 gallons. That is, each time 10,000 gallons of liquid has flowed past the flow meter, a signal is sent to the sampler, which registers it as a single flow pulse. The sampler can be programmed to totalize any number of flow pulses from 1 to 9999 before a sampling event is initiated. For example, if the sampler were programmed to totalize 5 flow pulses and each flow pulse represented 10,000 gallons of total flow, a sample would be collected each time 50,000 gallons (5 flow pulses of 10,000 gallons each) had passed the flow meter.

Time Interval Known

If the desired average time interval between individual samples is known, the flow increment between samples can be determined by calculating how much flow (based on the average flow rate) occurs during that time interval. For example, assume that the average flow is 2.5 MGD and it is desired to collect a sample every 30 minutes. The flow increment between samples is calculated:

2.5 MGD = 2,500,000 gal/day.

2,500,000 gal/day × 1 day/24 hrs × 1 hr/60 min = 1736 gal/min.

1736 gal/min × 30 min/sample = 52,080 gal/sample.

Thus, the desired flow increment between samples is approximately 52,000 gallons.

Number of Samples Known

Alternatively, if the total number of samples to be collected over the total sampling period is known, the flow increment between samples can be determined by calculating how much total flow will occur during the sampling period, and dividing this by the total number of samples to be collected. For example, assume that the average flow is 1.75 MGD, that the composite sampling period is 2 days, and that it is desired to collect 100 individual samples. The flow increment between samples is calculated:

1.75 MGD = 1,750,000 gal/day.

1,750,000 gal/day × 2 days = 3,500,000 gal

3,500,000 gal ÷ 100 samples = 35,000 gal/sample.

Thus, the desired flow increment between samples is approximately 35,000 gallons.

Calculation of Number of Flow Pulses

Once the desired flow increment between samples is known, the number of flow pulses to be programmed into the sampler may be calculated, assuming that the volume of the flow pulses from the flow meter is known. The number of flow pulses is calculated by dividing the flow increment between samples by the volume of each flow pulse. Using the first example above, the flow increment between samples was calculated as 52,000 gallons; assume that each flow pulse represents 10,000 gallons of flow. The number of flow pulses to be programmed into the sampler is calculated:

52,000 gal ÷ 10,000 gal/flow pulse = 5.2 flow pulses.

Rounding this to an even number results in 5 flow pulses to be programmed into the sampler. This in turn results in a flow increment between samples of 50,000 gallons (5 flow pulses × 10,000 gallons/flow pulse).

Total Number Of Samples

To calculate the total number of samples to be collected, three quantities must be known: the average flow rate, the flow increment between samples (calculated above), and the total time over which the composite sample is to be collected. The total number of samples to be collected is determined by first calculating the total flow volume over the sampling period, and then dividing this by the flow increment between samples. For example, assume that the average flow is 2.5 MGD, the flow increment between samples is 50,000 gallons, and the composite sample is to be collected over a 24 hour period. The total flow volume over a 24 hour period is:

2.5 MGD = 2,500,000 gal/day.

2,500,000 gal/day × 1 day = 2,500,000 gal.

The total number of samples to be collected in this 24 hour period is then calculated:

2,500,000 gal ÷ 50,000 gal/samples = 50 samples.

Thus, based on an average flow of 2.5 MGD, 50 samples will be collected.

Calculation of Sample Volume

To calculate the volume of each individual sample, the volume of the composite sample container being used and the total number of samples to be collected (calculated above) must be known. The individual sample volume is calculated by simply dividing the volume of the composite sample container being used by the total number of samples to be collected. For example, assume that a 2.5 gallon (9,400 ml) plastic container is being used, and that a total of 50 samples are to be collected in it. The individual sample volume is then calculated:

$$9400 \text{ ml} \div 50 \text{ samples} = 188 \text{ ml.}$$

Sample Volume Considerations

Thus, a sample volume of 188 ml will result in the desired composite sample. Because of the basic uncertainty of the delivered sample volume exactly matching the programmed nominal sample volume and the 10 ml sample repeatability, it is good practice to select a nominal sample volume which is slightly smaller than the calculated sample volume. This is to prevent overfilling of the sample container. In the example, an individual nominal sample volume of 125 ml might be a prudent choice. For critical applications, calibration of the sample volume can be used. It is important to select an individual sample volume which will not result in an overfilled sample container under worst-case conditions.

The nominal volume of the composite sample may be calculated by multiplying the programmed nominal sample volume by the total number of samples to be collected. In the example:

$$125 \text{ ml/sample} \times 50 \text{ samples} = 6{,}250 \text{ ml.}$$

This calculated total volume may vary from the actual total volume because of variations in the actual volume of each individual sample. The total time needed to collect the 50 individual samples may vary from the desired 24 hour period because of variations in the average flow rate from the 2.5 MGD figure used in these calculations.

Appendix E Glossary

Composite sampling - Composite sampling is a process in which multiple sample volumes are placed in a single container. A composite sample represents an average of the characteristics of the flow stream for the elapsed time of sampling.

Controller - The controller is a collection of electronic components which governs the actions of the sampler. It includes the microprocessor, RAM (Random Access Memory), ROM (Read Only Memory) and its imbedded software, the LCD (Liquid Crystal Display), and the keypad.

Cross contamination - Cross contamination occurs when portions of previous samples are mixed with the current sample. For example, cross contamination will result when residual amounts of sample remain in the suction line or pump tube from a previous sample event.

Event mark - An event mark is a signal sent by the sampler to a flow meter or other device at each sample event. Each time an event mark pulse is received by the flow meter, a mark is placed on the flow meter's recording chart. Marking the recording chart cross-references the charted flow with the sample events.

Post-sample purge - Post-sample purge refers to the suction line purge that follows the delivery of a sample volume. It is also called “post-purge.”

Pre-sample purge - Pre-sample purge refers to the suction line purge that precedes the delivery of a sample volume. It is also called “pre-purge.”

Real time clock - A clock which can be set to the actual time and date.

Sample event - A sample event consists of the complete sampling cycle resulting in the collection of a sample volume. A sample event includes pre-sample and post-sample purges, line rinses, liquid detection retries, and delivery of the sample volume.

Sample volume - The sample volume is the discrete, programmed amount of sample delivered to the bottle.

Sampling routine - A sampling routine, also called a sampling program, is the process of taking samples according to the program settings you enter when programming and configuring the controller. The program settings define the sample pacing, volume, and key times.

Selection - A selection is represented by a blinking word or number in an input display. The blinking selection indicates the current choice or value. Selections are accepted and stored by pressing the ENTER/PROGRAM key.

Suction head - Suction head is the vertical distance from the surface of the flow stream to the pump inlet.

Appendix F Material Safety Data Sheets

Code: J96001
Date: 23 DEC 1993
Printed: 05 JAN 1994

ENGELHARD
MATERIAL SAFETY DATA SHEET

Product: DESICCITE(R) 25

SECTION I: CHEMICAL PRODUCT AND COMPANY IDENTIFICATION

Common Name : BENTONITE, HEAT ACTIVATED GRANULES
Chemical Name : BENTONITE, HEAT ACTIVATED GRANULES
Formula : MONTMORILLONITE CLAY
Product CAS No.: 1302-78-9
Product Use : Drying agent

Supplier : ENGELHARD CORPORATION, CHEMICAL CATALYSTS GROUP
Address : 600 E. MCDOWELL ROAD
City, St, Zip : JACKSON, MS 39204
Phone : 1-800-458-8650 OR 1-800-654-4039

FOR CHEMICAL EMERGENCY CALL CHEMTREC (24 HOURS):
1-800-424-9300 (US, Canada, Puerto Rico, Virgin Islands)
1-202-483-7616 (Outside Above Area)

SECTION II: COMPOSITION/INFORMATION ON INGREDIENTS

INGREDIENT	CAS NO.	% Wt.
SILICA, CRYSTALLINE (QUARTZ)	14808-60-7	1-3
ALUMINUM SILICATE	12141-46-7	97

INGREDIENT NOTES

NOTE: Industrial hygiene sampling in our plant has shown the respirable fraction of crystalline silica quartz to be only 0.1-0.115%.

NOTE: See Section VIII for Exposure Limits and Section XI for Toxicological Information.

SECTION III: HAZARDS IDENTIFICATION

EMERGENCY OVERVIEW

Grey to off-white granules

Odorless

Flash Point: Not Applicable

SUSPECT CANCER HAZARD - Risk of cancer depends on route, duration and level of exposure.
Prolonged or repeated inhalation may cause lung damage.
May cause eye and respiratory tract irritation.
Not a fire or explosion hazard.

ROUTES OF ENTRY

Eyes? NO Skin? NO Inhalation? YES Ingestion? NO

POTENTIAL HEALTH EFFECTS

EYE CONTACT may cause mechanical irritation if exposed to large amounts of dust.

SKIN CONTACT may cause irritation due to mechanical abrasion.

INHALATION causes irritation of the respiratory tract and may cause disabling, progressive pulmonary fibrosis (silicosis) due to CRYSTALLINE SILICA (QUARTZ). Symptoms include cough, dyspnea, wheezing, and impairment of pulmonary function. Progression of symptoms can continue after dust exposure ceases.

INGESTION: No adverse effects expected.

CARCINOGENICITY

NTP? YES IARC? YES OSHA? NO

CRYSTALLINE SILICA is listed by the National Toxicology Program (NTP) as a confirmed animal carcinogen, and by the International Agency for Research on Cancer (IARC) as a Group 2A: sufficient evidence of carcinogenicity in laboratory animals and limited evidence in humans.

CHRONIC HEALTH HAZARDS

Refer to Potential Health Effects and Carcinogenicity.

MEDICAL CONDITIONS GENERALLY AGGRAVATED BY EXPOSURE

May aggravate existing medical conditions such as respiratory ailments.

NOTE: See Section VIII for Exposure Limits, Section XI for Toxicological Information and Section XII for Ecological Information.

SECTION IV: FIRST AID MEASURES

EYE CONTACT: Flush eyes with plenty of water. If irritation develops, call a physician.

SKIN CONTACT: Procedures normally not needed. If skin contact occurs flush with plenty of water. If irritation develops, call a physician.

INHALATION: Remove to fresh air. If breathing is difficult, give oxygen. Call a physician.

INGESTION: Procedures normally not needed. If large quantities are ingested, seek medical advice.

SECTION V: FIRE-FIGHTING MEASURES

Flash Point: Not Applicable
Auto-Ignition: Not Determined
LEL: Not Determined
UEL: Not Determined

NFPA HAZARD CLASSIFICATION

Health: 0 Flammable: 0 Reactivity: 0

HMIS HAZARD CLASSIFICATION

Health: 1* Flammable: 0 Reactivity: 0

* Indicates the possibility of chronic health effects. See Chronic Health Hazards in Section III for more information.

EXTINGUISHING MEDIA

Use water, carbon dioxide or foam.

SPECIAL FIRE FIGHTING PROCEDURES

Wear positive-pressure self-contained breathing apparatus in fire conditions.

UNUSUAL FIRE AND EXPLOSION HAZARDS

Not a fire or explosion hazard.

SECTION VI: ACCIDENTAL RELEASE MEASURES

Contain spillage and scoop up or vacuum. Avoid dusting.

NOTE In the event of an accidental release of this material, the above procedures should be followed. Additionally proper exposure controls and personal protection equipment should be used (see Section VIII - Exposure Control/Personal Protection) and disposal of the material should be in accordance with Section XI - Disposal Considerations.

SECTION VII: HANDLING AND STORAGE

Use dustless systems for handling, storage, and clean up so that airborne dust does not exceed the PEL. Use adequate ventilation and dust collection. Practice good housekeeping. Do not permit dust to collect on walls, floors, sills, ledges, machinery, or equipment. Maintain, clean, and fit test respirators in accordance with OSHA regulations. Maintain and test ventilation and dust collection equipment. Wash or vacuum clothing which has become dusty. Product becomes slippery when wet.

Avoid breathing dust.

Avoid contact with eyes.

Use only with adequate ventilation.

SECTION VIII: EXPOSURE CONTROLS/PERSONAL PROTECTION

EXPOSURE LIMITS

INGREDIENT	PEL-OSHA	TLV-ACGIH
SILICA, CRYSTALLINE (QUARTZ) CAS NO.: 14808-60-7	0.1 mg/m^3 (Respirable dust)	0.1 mg/m^3 (Respirable dust)
ALUMINUM SILICATE CAS NO.: 12141-46-7	15 mg/m^3 (as Al, dust) 5 mg/m^3 (as Al, respirable fraction)	10 mg/m^3 (as Al, dust)

Unless otherwise noted, all values are reported as 8-hour Time-Weighted Averages (TWAs) and total dust (particulates only). All ACGIH TLVs refer to the 1992-93 Standards. All OSHA PELs refer to 29 CFR Part 1910 Air Contaminants: Final Rule, January 19, 1989.
NOTE: As a result of the July 7, 1992 decision by the U.S. Circuit Court of Appeals (AFL-CIO v. OSHA) to vacate the 1989 PELs, OSHA will no longer enforce these new limits and will return to the pre-1989 PELs. Engelhard, however, will continue to list the more protective 1989 levels.

RESPIRATORY PROTECTION

A NIOSH/MSHA-approved respirator is recommended if dust is generated.

VENTILATION

General; local exhaust ventilation as necessary to control any air contaminants to within their PELs or TLVs during the use of this product.

PROTECTIVE EQUIPMENT

Safety glasses (with side shields).

PERSONNEL SAMPLING PROCEDURE

For CRYSTALLINE SILICA: Refer to NIOSH Manual of Analytical Methods, 3RD Edition, Volume 2, Methods 7500, 7601 and 7602.

SECTION IX: PHYSICAL AND CHEMICAL PROPERTIES

Boiling Point: Not Applicable
Specific Gravity (H_2O=1): 2.0
Melting Point: Not Applicable
Vapor Pressure (mm Hg): Not Applicable
Vapor Density (Air=1): Not Applicable
Evap
% Solubility In Water: Negli
Appearance: Grey to off-white granules
Odor: Odorless
pH: Not Determined

SECTION X: STABILITY AND REACTIVITY

Stability: Generally considered stable.
Avoid: None expected.

INCOMPATIBILITY (Materials to Avoid)

None expected.

HAZARDOUS DECOMPOSITION OR BY-PRODUCTS

None expected.

Polymerization: Polymerization is not expected to occur.
Avoid: Not applicable.

SECTION XI: TOXICOLOGICAL INFORMATION

CHEMICAL NAME	% Wt.	LD50	LC50
SILICA, CRYSTALLINE (QUARTZ) CAS NO.: 14808-60-7	1-3	Not Available	Not Available
ALUMINUM SILICATE CAS NO.: 12141-46-7	97	Not Available	Not Available

NOTE: See Sections III, VIII and XII for additional information.

SECTION XII: ECOLOGICAL INFORMATION

ECOTOXICITY

No data available.

ENVIRONMENTAL FATE

No data available.

SECTION XIII: DISPOSAL CONSIDERATIONS

US EPA Waste Number: Not Regulated

Federal, state and local disposal laws and regulations will determine the proper waste disposal/recycling/reclamation procedures.

NOTE Chemical additions, processing or otherwise altering this material may make the waste management information presented above incomplete, inaccurate or otherwise inappropriate.

As local regulations may vary; all waste must be disposed/recycled/reclaimed in accordance with federal, state, and local environmental control regulations.

SECTION XIV: TRANSPORT INFORMATION

INTERNATIONAL
UN Number: Not Regulated

UNITED STATES

EPA Waste Number: Not Regulated
DOT Classification: Not Regulated

CANADA
PIN Number: Not Regulated
TDG Class: Not Regulated

EC
DGL: Not Regulated

SECTION XV: REGULATORY INFORMATION

US FEDERAL REGULATIONS

TSCA: IN TSCA

SARA 311 AND 312 HAZARD CATEGORIES

IMMEDIATE (Acute) Health Hazard: NO
DELAYED (Chronic) Health Hazard: YES
FIRE Hazard: NO
REACTIVITY Hazard: NO
Sudden Release of PRESSURE: NO

SARA SECTION 313 NOTIFICATION

This product does not contain toxic chemicals subject to the reporting requirements of Section 313 of Title III of the Superfund Amendments and Reauthorization Act of 1986 and 40 CFR Part 372.

OZONE DEPLETING SUBSTANCES (ODS)

This product neither contains nor is manufactured with an ozone depleting substance subject to the labelling requiremehe Clean

VOLATILE ORGANIC COMPOUNDS (VOC)

Not Determined

US STATE REGULATIONS

CALIFORNIA: The State of California has a regulation (Proposition 65) which identifies specific chemicals known to the State of California to cause cancer or birth defects. Proposition 65 requires a disclosure for products sold within the State of California containing an identified chemical. The following information is required by the State of California for this product:

*This product contains chemicals known to the State of California to cause cancer.

VOLATILE ORGANIC COMPOUND (CARB): Not Determined

CANADIAN REGULATIONS

DSL/NDSL: DSL
WHMIS Classification: Class D Division 2 Subdivision A

EUROPEAN REGULATIONS

EINECS: Yes

OTHER REGULATIONS

MITI: Yes AICS: Yes

SECTION XVI: OTHER INFORMATION

REVISIONS
Revision Number: 10
This MSDS has been revised in the following section(s):

SECTION II: COMPOSITION/INFORMATION ON INGREDIENTS
SECTION VIII: EXPOSURE CONTROLS/PERSONAL PROTECTION
SECTION IX: PHYSICAL AND CHEMICAL PROPERTIES
SECTION XV: REGULATORY INFORMATION

PREPARATION INFORMATION

Prepared By: Corporate Environment, Health & Safety Group
Phone Number: See Section I

The information in this Material Safety Data Sheet should be provided to all who will use, handle, store, transport, or otherwise be exposed to this product. This information has been prepared for the guidance of plant engineering, operations, and management and for persons working

with or handling this product. The information presented in the MSDS is premised upon proper handling and anticipated uses and is for the material without chemical additions/alterations. We believe this information to be reliable and up-to-date as of the date of publication, but make no warranty that it is. Additionally, if this Material Safety Data Sheet is more than three years old, please contact the supplier at the phone number listed in Section I to make certain that this sheet is current. End of MSDS.....

UNITED DESICCANTS

United Catalysts Inc.
Desiccants Division

101 Christine Drive
Rio Grande Industrial Park
Belen, NM 87002
Telephone: 505-864-6691
Fax: 505-864-9296

MATERIAL SAFETY DATA SHEET
DESI PAK
Packaged Desiccant

SECTION I PRODUCT IDENTIFICATION

Trade Name and Synonyms: DESI PAK

Chemical Family: Clay Mineral

Chemical Names & Synonyms: Montmorillonite Clay Mineral
Smectite Clay Mineral
Bentonite
Calcium Aluminosilicate

Formula: $(Ca)x(Al_2\text{-}xMgx)Si_4O_{10}(OH)_2.nH_2O$

NFPA/HMIS: HEALTH - 0, FIRE - 0, REACTIVITY - 0, SPECIFIC HAZARD - SEE SECTION X

SECTION II HAZARDOUS INGREDIENTS

Hazardous Components in the Solid Mixture

COMPONENT	CAS No.	%	OSHA/PEL	ACGIH/TLV
Montmorillonite Clay Mineral Respirable Dust	1302-78-9	≥ 99	5.0 mg/m^3	5.0 mg/m^3
Silicon dioxide (Crystalline Quartz) Respirable Dust	14808-60-7	≤ 1	0.1 mg/m^3	0.1 mg/m^3

INGREDIENT HAZARD STATEMENT - Risk of cancer depends on duration and level of exposure. This product contains less or equal to 1% crystalline quartz (CAS #14808-60-7). The quartz contained in the material is in granular form and packed in bags for use as a desiccant. Therefore, no exposure to quartz dust is anticipated under normal use of this product. Avoid inhaling desiccant dust.

Prolonged or repeated exposure may cause lung injury. Unless otherwise noted, all values are reported as 8-hour Time Weighted Averages (TWA's) and total dust (particulates only). All ACGIH TLV's refer to the 1989-90 Standards. All OSHA PEL's refer to CFR Part 1910 Air Contaminants: Final Rule, January 19, 1989.

MATERIAL SAFETY DATA SHEET
DESI PAK
Packaged Desiccant

SECTION III PHYSICAL DATA

Appearance and Odor: Gray granules. No odor.

Melting Point: N/A

Solubility in Water: Insoluble.

Bulk Density: 57-64 lbs./cu. ft.

Percent Volatile by Weight at 150 deg C: < 3.0 %.

SECTION IV FIRE EXPLOSION DATA

Fire and Explosion Hazard - Negligible fire and explosion hazard when exposed to heat or flame by reaction with incompatible substances.

Flash Point - Nonflammable.

Firefighting Media - Dry chemical, water spray, or foam. For larger fires, use water spray fog or foam.

Firefighting - Nonflammable solids, liquids or gases: Cool containers that are exposed to flames with water from the side until well after fire is out. For massive fire in enclosed area, use unmanned hose holder or monitor nozzles; if this is impossible, withdraw from area and let fire burn. Withdraw immediately in case of rising sound from venting safety device or any discoloration of the tank due to fire.

SECTION V HEALTH HAZARD DATA

This material is normally packaged and contained in a bag. If the bag is open, the resulting dust is classified a nuisance dust, and may cause health hazards when inhaled, ingested or in contact with the eyes and skin. Prolonged inhalation may cause irritation to the upper respiratory tract and/or lung damage. If large amounts are ingested, intestinal disorders may occur. Contact with eye tissue may result in irritation. Prolonged or repeated contact with the skin in the absence of proper hygiene may cause irritation.

DESI PAK clay may contain a small amount of crystalline silica (quartz). Inhalation of crystalline silica in the respirable range in excess of the TLV may result in an increase in the risk of serious respiratory disease. Avoid breathing the dust. Use NIOSH/MSHA approved respirators when the TLV for crystalline silica may be exceeded.

MATERIAL SAFETY DATA SHEET
DESI PAK
Packaged Desiccant

Crystalline silica is listed by the International Agency for Research on Cancer (IARC) as a 2A: sufficient evidence in laboratory animals and limited evidence of carcinogenicity in humans.

CARCINOGENICITY

NTP? NO IARC? YES OSHA? NO

First Aid (Inhalation) - Remove to fresh air immediately. If breathing has stopped, give artificial respiration. Keep affected person warm and at rest. Get medical attention immediately.

First Aid (Ingestion) - If large amounts have been ingested, give emetics to cause vomiting. Stomach siphon may be applied as well. Milk and fatty acids should be avoided. Get medical attention immediately.

First Aid (Eyes) - Wash eyes immediately and carefully for 30 minutes with running water, lifting upper and lower eyelids occasionally. Get prompt medical attention.

First Aid (Skin) - To avoid repeated or prolonged contact with this chemical, use good hygienic practices. Wash with soap and a large amount of water. Get medical attention if irritation or inflammation develops.

SECTION VI REACTIVITY DATA

Reactivity - Is stable under normal temperatures and pressures in sealed containers. Hazardous polymerization will not occur.

SECTION VII SPILL OR LEAK PROCEDURES

Notify safety personnel of spills or leaks. Clean-up personnel need protection against inhalation of dusts or fumes. Eye protection is required. Vacuuming and/or wet methods of cleanup are preferred. Place in appropriate containers for disposal, keeping airborne particulates at a minimum. Clay is slippery when wet.

Disposal - Consult applicable local, state, and federal regulations to select the method of disposal. Recover metal components by reprocessing whenever possible.

Updated: April 4, 1994 Page 3

MATERIAL SAFETY DATA SHEET
DESI PAK
Packaged Desiccant

SECTION VIII SPECIAL PROTECTION INFORMATION

Respiratory Protection - Provide a NIOSH/MSHA jointly approved respirator in the absence of proper environmental control. Contact your safety equipment supplier for proper mask type.

Ventilation - Provide general and/or local exhaust ventilation to keep exposures below the TLV. Ventilation used must be designed to prevent spots of dust accumulation or recycling of dusts.

Protective Clothing - Wear protective clothing, including long sleeves and gloves, to prevent repeated or prolonged skin contact.

Eye Protection - Chemical splash goggles designed in compliance with OSHA regulations are recommended. Consult your safety equipment supplier.

SECTION IX STORAGE PRECAUTIONS

Store in a dry, well ventilated place, below 115 degrees F., away from a heat source. Keep in tightly closed container. Protect container from physical damage. Always reseal container and protective moisture barrier liner after use.

SECTION X

HMIS (Hazardous Materials Identification System) for this product is as follows:

Health Hazard	0
Flammability	0
Reactivity	0
Personal Protection	HMIS assigns choice of personal protective equipment to the customer, as the raw material supplier is unfamiliar with the condition of use.

* No Information Available

Doc. 50

Updated: April 4, 1994 Page 4

Material Safety Data Sheet

Natrasorb M (Clay-Paper Pouch)

Identity (Trade Name as Used on Label)

Manufacturer: MULTISORB TECHNOLOGIES, INC. (formerly Multiform Desiccants, Inc.)	MSDS Number*:
Address: 325 Harlem Road Buffalo, NY 14224	CAS Number*:
Phone Number (For Information): 716/824-8900	Date Prepared: April 19, 1996
Emergency Phone Number: 716/824-8900	Prepared By*: G.E. McKedy

Section 1 - Material Identification and Information

Components - Chemical Name & Common Names (Hazardous Components 1% or greater; Carcinogens 0.1% or greater)	%*	OSHA PEL	ACGIH TLV	OTHER LIMITS RECOMMENDED
Montmorillonite Clay	86-93	N/A	N/A	
Crystalline silica quartz	2-4	2mg/m³ (respirable dust)	0.1 mg/m³ (respirable dust)	
Non-Hazardous Ingredients Paper	5-10			
TOTAL	100			

Section 2 - Physical/Chemical Characteristics

Boiling Point	N/A	Specific Gravity (H_2O = 1)	2.0 (Montomorillonite Clay)
Vapor Pressure (mm Hg and Temperature	N/A	Melting Point	N/A
Vapor Density (Air =1)	N/A	Evaporation Rate (=1)	N/A
Solubility in Water	Not soluble, but will adsorb moisture.	Water Reactive	Not reactive, but will adsorb moisture.
Appearance and Odor	Paper pouch containing tan powder.		

Section 3 - Fire and Explosion Hazard Data

Flash Point and Methods Used	N/A	Auto-Ignition Temperature	N/A	Flammability Limits in Air % by Volume	N/A	LEL	UEL
Extinguisher Media	Water is best extinguishing medium, but dry chemical, carbon dioxide and foam can be used.						
Special Fire Fighting Procedures	None. The paper pouch will burn, but the clay will not.						
Unusual Fire and Explosion Hazards	None.						

Section 4 - Reactivity Hazard Data

STABILITY ☒ Stable ☐ Unstable	Conditions To Avoid	Moisture, clay will adsorb moisture.
Incompatibility (Materials to Avoid)	None.	
Hazardous Decomposition Products	Carbon dioxide, carbon monoxide, water	
HAZARDOUS POLYMERIZATION ☐ May Occur ☒ Will Not Occur	Conditions To Avoid	None

Section 5 - Health Hazard Data

PRIMARY ROUTES OF ENTRY	☒ Inhalation ☒ Skin Absorption	☒ Ingestion ☐ Not Hazardous	CARCINOGEN LISTED IN	☐ NTP ☐ IARC Monograph	☐ OSHA ☒ Not Listed
HEALTH HAZARDS	Acute	May cause eye, skin and mucous membrane irritation.			
	Chronic	Prolonged inhalation may cause lung damage.			
Signs and Symptoms of Exposure	Drying and irritation.				
Medical Conditions Generally Aggravated by Exposure	Asthma				
EMERGENCY FIRST AID PROCEDURES - Seek medical assistance for further treatment, observation and support if necessary.					
Eye Contact	Flush with water for at least 15 minutes.				
Skin Contact	Wash affected area with soap and water.				
Inhalation	Remove affected person to fresh air.				
Ingestion	No adverse effects expected.				

Section 6 - Control and Protective Measures

Respiratory Protection (Specify Type)	Use NIOSH approved dust respirator.		
Protective Gloves	Light cotton gloves.	Eye Protection	Safety glasses.
VENTILATION TO BE USED	☐ Local Exhaust	☐ Mechanical (General)	☐ Special
	☒ Other (Specify) None.		
Other Protective Clothing and Equipment	None.		
Hygienic Work Practices	Avoid raising dust. Avoid contact with skin, eyes and clothing.		

Section 7 - Precautions for Safe Handling and Use/Leak Procedures

Steps to be Taken if Material Is Spilled Or Released	Sweep or vacuum up the spilled material and place in a waste disposal container. Avoid raising dust.
Waste Disposal Methods	Dispose in an approved landfill according to federal, state and local regulations.
Precautions to be Taken In Handling and Storage	Cover promptly to avoid blowing dust. Wash after handling.
Other Precautions and/or Special Hazards	Keep in sealed container away from moisture. Clay will readily adsorb moisture.

One Year Limited Warranty *

Factory Service

Isco instruments covered by this warranty have a one-year limited warranty covering parts and labor.

Any instrument that fails during the warranty period, due to faulty parts or workmanship, will be repaired at the factory at no charge to the customer. Isco's exclusive liability is limited to repair or replacement of defective instruments. Isco is not liable for consequential damages.

Isco will pay surface transportation charges both ways within the 48 contiguous United States if the instrument proves to be defective within 30 days of shipment. Throughout the remainder of the warranty period, the customer will pay to return the instrument to Isco, and Isco will pay surface transportation to return the repaired instrument to the customer. Isco will not pay air freight or customer's packing and crating charges.

The warranty for any instrument is the one in effect on date of shipment. Warranty period begins on the shipping date, unless Isco agrees in writing to a different date.

Excluded from this warranty are normal wear; expendable items such as charts, ribbon, tubing, and glassware; and damage due to corrosion, misuse, accident, or lack of proper maintenance. This warranty does not cover Isco on-line Process Analyzers and certain Isco SFE instruments, which are covered under different warranty terms, nor does it cover products not sold under the Isco trademark or for which any other warranty is specifically stated in sales literature.

This warranty is expressly in lieu of all other warranties and obligations and Isco specifically disclaims any warranty of merchantability or fitness for a particular purpose. Any changes in this warranty must be in writing and signed by a corporate officer.

The warrantor is Isco, Inc. 4700 Superior, Lincoln, NE 68504, U.S.A.

*** This warranty applies to USA customers. Customers in other countries should contact their Isco dealer for warranty service.**

Before returning any instrument for repair, please call, fax, or e-mail the Isco service department for instructions. Many problems can often be diagnosed and corrected over the phone, or by e-mail, without returning the instrument to the factory.

Instruments needing factory repair should be packed carefully, preferably in the original carton, and shipped to the attention of the service department. Small, non-fragile items can be sent by insured parcel post. **PLEASE BE SURE TO ENCLOSE A NOTE EXPLAINING THE DEFECT.**

Return instruments to: Isco, Inc. - Attention Repair Service
4700 Superior Street
Lincoln NE 68504 USA

Mailing address: Isco, Inc.
PO Box 82531
Lincoln NE 68501 USA

Phone: Repair service: (800)775-2965 (lab instruments)
(800)228-4373 (samplers & flowmeters)
Sales & General Information (800)228-4373 (USA & Canada)

Fax: (402) 465-3001

Email: service@isco.com

November 2000 • #2217

Isco, Inc.
www.isco.com